ST. CHARLES PARISH

DEPARTMENT OF WATERWORKS

DISTRIBUTION SYSTEM SPECIFICATIONS

ST. CHARLES PARISH DEPARTMENT OF WATERWORKS

DISTRIBUTION SYSTEM SPECIFICATIONS

© St. Charles Parish Consolidated
Waterworks and Wastewater District No. 1
P.O. Box 108 • Luling, Louisiana 70070
Phone (504) 783-5110 • Fax (504) 785-2005

Prepared By: _____

Reviewed By: _____

Approved By: _____

Date Issued: _____

ONLINE MANUAL:

DOUBLE CLICK A PAGE NUMBER IN THE TABLE OF CONTENTS TO GO TO A TOPIC.

DOUBLE CLICK TO RETURN TO THE TABLE OF CONTENTS.

Table of Contents

1. NEW DEVELOPMENTS 1

1.1. LETTER TO DEVELOPERS 1
1.2. APPROVAL PROCEDURES 2

2. SPECIFICATIONS 5

2.1. MATERIAL SPECIFICATIONS .. 5
2.2. DESIGN REQUIREMENTS 8
2.3. METER SERVICE LINES 11
2.4. CONTRACTORS 12
2.5. INSTALLATION INSPECTION 13
2.6. TESTING / DISINFECTION 14
2.6.1. Flushing 14
2.6.2. Pressure and Leakage Test ... 15
2.6.3. Leakage Test 17
2.6.4. Disinfecting 18
2.6.5. Chlorine Application 18
2.6.6. Final Flushing 18
2.7. DIAGRAMS 19
2.7.1. Fire Hydrant 19
2.7.2. Canal Crossing 20

3. PIPE CASING 23

3.1. WATER MAIN CASING 23
3.2. PVC CASING DIAGRAM 24

4. BACKFLOW PREVENTERS 25

4.1. POLICY 25
4.2. APPROVED TYPES 26
4.3. INSTALLATION 27
4.3.1. Diagram 28

5. SPRINKLER SYSTEMS 29

5.1. INSTALLATIONS 29
5.2. DIAGRAMS 30
5.3. ANTI-FREEZE PROTECTION .. 34

6. WATER MAIN DEFLECTION 35

6.1. PIPE DEFLECTION 35
6.2. DIAGRAMS / CHARTS 36

7. ROADS 41

7.1. ROAD SURFACES 41

8. APPROVED METER TYPES 43

8.1. APPROVED METER TYPES 43

9. WATER MAIN DISINFECTION .. 46

9.1. CHLORINATION 46

10. RIGHT-OF-WAY 47

10.1. POLICY 47
10.2. DEFINITIONS 47
10.3. RIGHT-OF-WAY FORM 48

11. HIGHWAY DEPARTMENT 51

11.1. PERMIT FEES 51

12. EXCAVATIONS 59

12.1. LA. ONE CALL 59
12.1.1. Requirements 59
12.1.2. Procedures 59
12.2. LA. STATE LAW 62

13. PARISH REGULATIONS 69

13.1. SUBDIVISIONS 69

14. INDEX 77

1. NEW DEVELOPMENTS

1.1. LETTER TO DEVELOPERS

SAMPLE FORM LETTER TO DEVELOPERS

Dear

Enclosed are copies of the Waterworks Department's Procedures for approval and distribution installations specifications for new development.

If you have any questions, please let me know.

Director

1.2. APPROVAL PROCEDURES

1. Any subdivider, developer, or development group seeking to subdivide or develop land in St. Charles Parish should, prior to the preparation of an appropriate plan, contact the Department of Planing and Zoning to ascertain existing subdivision regulations, zoning regulations, as well as other parish, state, and federal guidelines regulating the use and development of land in the vicinity of the proposed subdivision. St. Charles Parish Code, Appendix C, St. Charles Parish Subdivision Regulations of 1981, Ordinance No. 81-8-2.

2. One (1) set of the proposed water system specifications and plans approved by a Louisiana Registered Professional Engineer will be presented to the Waterworks Department for review. In addition an electronic set of plans will be submitted to the Waterworks Department and will include all infrastructure and utilities.

3. Plans and specifications for new developments must be submitted to the Louisiana Department of Health and Hospitals for review. The plans will be checked for conformity with applicable provisions of the State Sanitary Code. Approval refers to sanitary features of design only and is not to be taken as approval of structural details.

4. Not less than seven (7) days before commencement of construction, the contractor must submit to the Waterworks a written notice stating the date construction will begin.

5. A pre-construction conference will be held by the contractor with the Waterworks' representative(s).

6. Construction must begin within twelve (12) months of the date of approval or the plans and specifications must be resubmitted to the Waterworks. Approval for any portion unfinished after three (3) years is automatically rescinded. Plans and specifications must then be resubmitted to the Waterworks for approval.

7. Upon completion of construction, pressure and leakage tests will be conducted, the lines disinfected and bacteriological samples taken.

8. The Louisiana Department of Health and Hospitals must approve bacteriological tests on the new system.

9. A final inspection and approval must be obtained from the Waterworks.

NEW DEVELOPMENT APPROVAL PROCEDURE (cont.)

10. The contractor shall guarantee the installation against any defects beginning with commencement of construction and ending one year after approval by the Council. Any lines, hydrants, fittings, etc., which fail due to defective material or faulty installation will be repaired promptly by the contractor. If immediate repair is not made, Waterworks' personnel will make the repair and the developer will be billed for actual time, material and equipment required for repairs.

11. The Waterworks will be given one (1) set of "As Built" plans and one set of electronic plans.

12. A notice of completion must be submitted to the Louisiana Department of Health and Hospitals.

13. Upon final acceptance of the development, the Waterworks will give written notice to the Planning and Zoning Commission.

14. Before a new water meter service can be installed, the Waterworks must be presented with a Planning and Zoning "Certificate of Zoning Compliance", a "Sewer Service Permit" (if applicable), a payment for a meter installation service charge and a meter deposit. New meter services will be placed on the right-of-way property line.

2. SPECIFICATIONS

2.1. MATERIAL SPECIFICATIONS

Specification references to Standard Specifications of AWWA, ASTM, ANSI, AWPA, etc., shall apply to the latest edition, revision or addendum thereto.

Ductile iron pipe shall be mechanical joint type manufactured and factory tested in accordance with AWWA C150 and AWWA C151, Class 50, cement lined conforming to AWWA C104.

PolyVinyl Chloride (PVC) plastic pipe shall be Class 150 with integral bell that meets the requirements of AWWA C-900 and Underwriter's Laboratories (UL). The pipe shall meet requirements of wall thickness, of dimension ratio DR18 and shall be manufactured to ductile iron size outside dimensions. Only PVC in blue color will be used underground. The standard length shall be 20 feet. The bell shall consist of an integral wall section with reinforced rubber ring. Mechanical joint fittings will be used with PVC pipe.

Polyethylene pipe shall be Class DR-11 Ductile Iron size that meets the requirements of AWWA C-906. Polyethylene pipe will only be allowed in remote areas and will not have any service taps made on it. The final decision on allowable usage of polyethylene pipe will be made by the Waterworks Department.

Ductile iron mechanical joint fittings shall be the compact type conforming to AWWA C153 and AWWA C110 rated for 350 psi working pressure, cement lined in accordance with AWWA C104 with joints, ring type gaskets, lubricant and accessories conforming to applicable requirements of AWWA C111. Corten Teflon Coated bolts shall be used.

Gate valves shall be iron bodied, epoxy coated interior, fully supported modified wedge disc with a resilient rubber seat ring internally reinforced by a concentric steel ring, which are manufactured and tested in accordance with AWWA specification C509. They shall be 200 psi working pressure and 400 psi test pressure. Valves shall have a non-rising stem with a 2 inch square wrench nut, with S/S bolt and/or nut, shall open by turning counter-clockwise and shall be equipped with O-ring stem seals. The bonnet bolts shall be stainless steel types 304. Stainless steel nuts and bolts type 304 shall be used when connecting flanged gate valves to flanged tees. Valves shall be Mueller series A2360-20 (-16) or approved equal.

MATERIAL SPECIFICATIONS (cont.)

Tapping sleeve valves shall be similar to gate valves specified above and shall be Mueller A2360-16 or approved equal.

Tapping sleeves shall be the stainless steel sleeve type. The body shall be a full circle band that meets or exceeds the Waterworks specifications for repair clamps, stainless steel 18-8 type 304 with gridded overlapping virgin neoprene rubber gasket. The flange shall be 304(18-8) stainless steel or ductile iron AWWA C207 Class D ANSI 150 lb. drilling recessed to accept a standard tapping valve. All bolts shall be type 304 stainless steel. Tapping sleeves shall be Smith-Blair 662 or 663, JCM 432, Romac SST or Mueller H-304.

Valve boxes shall be constructed of cast iron for roadway service, with a minimum inside diameter of 5 1/4 inches. The box shall be the adjustable screw type consisting of two pieces (a base and a top section) and shall include a cover. The cover shall be of the deep (2 inches) socket type with the word WATER cast on the top. The box shall be Tyler 461-S/562-S or approved equal.

Valve box risers shall be made of cast iron for roadway service. The riser shall fit into the top section of Tyler 461-S/562-S valve boxes and accept the lid. The riser shall be a Trumbull 357 series or approved equal.

Fire hydrants shall conform to AWWA specification C-502. Main valve shall be 5 1/4 inch compression type which closes with pressure. Hydrant shall have two 2 1/2 inch hose nozzles and one 4 1/2 inch pumper nozzle with nozzle caps and cap chains. All nozzles shall have National Standard threads. Operating nut shall be pentagonal measuring 1 1/2 inches from point to flat. Hydrant shall open by turning counter-clockwise. Hydrant shoe shall have mechanical joint connection for 6-inch pipe. The inside shoe shall be epoxy coated. Fire hydrant shall have two (2) drain holes. Hydrant barrel shall be of suitable length to set breakaway flange between 5" and 8" above finished grade. Fire hydrants shall be red in color. Hydrants shall be Mueller A-423 Super Centurion 250 or equal.

Romac grip ring pipe restrainers shall be used for the installation of fire hydrants, tees, valves and any directional change of water main.

Sleeves or clamps shall not be used for water main installations except for connection to existing mains or as directed by the Waterworks.

MATERIAL SPECIFICATIONS (cont.)

Concrete precast slabs around valve boxes shall be 2500 pound compression strength at 28 days, two feet square and 4" thick. The circular opening in the center of the slab shall be approximately 3/4" greater in diameter than the outer diameter of the valve box.

Repair clamp shall be a complete circle stainless steel clamp pre-assembled with a gasket, a bridge plate, lugs, nuts and bolts. The band shall be stainless steel type 304 with ends contoured into and positively attached to ductile iron or stainless steel lugs. The gasket shall be a lap type with tapered ends, gridded, of virgin neoprene rubber for water service. The bridge plate shall be stainless steel type 304 recessed flush and bonded into the gasket. Bolts shall be high strength type 304 stainless steel. Lugs shall be ultra high strength ductile iron to ASTM A536 or stainless steel. The clamp shall be a Smith-Blair 226 or 261, JCM 101 or 131, Romac CL1 or SS1, or Mueller 210 or 211 Stainless Steel.

Lumber for thrust blocks or fixture foundation shall be made with pressure treated southern yellow pine C-2.40 treated lumber for underground service.

Concrete posts shall be not less than 4 1/2 inches square with a length of 7 feet for valve markers. Each post shall be reinforced with two No. 3 deformed reinforcing bars. These posts may be secured from Precast Concrete Step Company, 901 South White, New Orleans, Louisiana.

Pipe casing: Refer to Pipe Casing section.

Road surfaces: Refer to Road Surface section.

Waterworks superintendent or leadmen must inspect all pipes, fittings and materials before they can be installed into the system.

Meters: Refer to Approved Meter section.

2.2. DESIGN REQUIREMENTS

Water mains shall be a minimum of 8-inch diameter. Larger diameter mains may be required by the Waterworks to insure an adequate supply to the development. Water mains shall be valved at each intersection, as required at tees or crosses and at a minimum of every 1000 feet. Valves shall be located as shown on approved plans and shall be set with stems vertical. The contractor will indicate the location of each valve by means of a "V" shaped notch cut into the curbing at the valve site. Each valve must have a valve box centered over the valve stem to allow free access of a valve wrench. The top shall be set level with the finished grade surface. A pre-cast concrete slab shall be set around each valve box and the top level with the finished grade surface.

Cover over water lines shall be maintained as follows:

A. 8" main shall have 36" to 40" of cover.

B. Mains larger than 8" shall have 42" to 46" of cover.

C. Mains which cross under ditches shall be 24" to 28" below the invert of the ditch.

D. Mains which cross under a canal shall be installed under the canal 26" to 40" below the invert of the canal. If the invert of the canal is more than 20 feet in width, a casing must be installed.

Water main looping: All 6" water mains of 1500 feet or more, and 8" water mains of 1000 feet or more, including existing mains, shall be looped to two (2) separate sources of water, where practical.

Fire hydrants shall be installed not more than 500 feet apart on the property line extended and at ends of lines to allow for flushing. Install all hydrants in a exact vertical position. Pumper nozzles shall face toward the street. Hydrant shall have proper bury length so that the bottom of the safety flange is between 5" and 8" above finished grade level. Each hydrant shall have a 6" main lead of at least 3 feet. Hydrants shall be attached with Romac grip ring pipe restraints. Hydrant valves shall be a minimum of 3 feet from hydrants located along a highway or thoroughfare shall be valved. Hydrants that require valves shall be connected by a mechanical joint x flanged tee.

DESIGN REQUIREMENTS (cont.)

Pipe shall be received, stored, handled and installed strictly in accordance with the manufacturer's instructions. Only lubricant specified by the pipe manufacturer shall be used. Ends of pipe and fitting shall be thoroughly cleaned before applying joint lubricant. During joint assembly, PVC pipe shall be pushed into the bell up to the circumferential reference mark. In no case will solvent cement be used for joining pipe. Tighten mechanical joint bolts alternately on opposite sides in order to compress the gasket uniformly. All underground ductile pipe and fitting shall be covered with 8 mil polyethylene film.

Pipe shall be installed according to applicable AWWA Standards.

Each section of pipe and each fitting shall be examined for defects before lowering in the trench. Any defective or damaged material shall be rejected and removed from the work site. All pipe and accessories shall be carefully lowered into the trench in such a manner as to prevent damage. Under no circumstances shall pipe or accessories be dumped or dropped into the trench. Holes for couplings or bells shall be cut for all pipe regardless of type of pipe used. The barrel of the pipe shall rest evenly on the trench from end to end except for coupling or bell holes. If the trench bottom will not support the weight of the fitting, a foundation of select earth or shell shall be installed. Holes shall be sufficiently large to allow proper makeup of joint so that joints do not support the pipe weight.

All pipe and material shall be kept clean during and after laying. If necessary, a swab will be used. Trench water shall not be permitted to enter pipes. The Waterworks reserves the right to suspend pipe-laying operations when unsuitable trench conditions exist. When pipe-laying is not in progress, the open ends of the pipe shall be closed by use of temporary pipe plugs or night caps. Plywood or similar make shift blocking which does not produce a water tight seal will not be acceptable.

All pipe shall be laid true to alignment and grade. Required horizontal or vertical defection shall not exceed 75% of the maximum recommended by the pipe manufacturer.

DESIGN REQUIREMENTS (cont.)

Hot taps made by the contractor on existing water mains shall be made with a Mueller CL12 or C1-36 tapping machine.

All plugs, tees, bends and Hydrants shall have celcure treated lumber rated for underground use for thrust blocks and fixture foundation of sufficient size to resist the force of water on or through the fitting.

Any underground facility installed that is non-conductive to electric current must be installed with a non-corrosive tape placed directly over and on the center of the facility about 24 inches above the pipe. The tape must be connected to all fixtures and appurtenances. A tracer wire shall also be attached directly to the pipe, all fixtures and appurtenances. The tracer wire will be run to the top of each valve box to allow direct connection to the wire.

Radial clearance between parallel water and sewer lines shall be not less than six (6) feet radial distance from water lines. In the event that sewer lines cross water mains, sewer lines must be at least eighteen (18) inches below water main at a 90° crossing. No utilities shall be installed directly above the water lines running parallel or closer than three (3) feet to the center of the water main.

2.3. METER SERVICE LINES

Meter service lines: Underground service line valves and fittings shall conform to AWWA C800. Corporation stops hall be Mueller H-15000, or approved equal. Curb stops shall be Mueller H-15166, or approved equal. Copper tubing conforming to AWWA C800 or polyethylene tubing 200 psi PE3408 or approved equal conforming to AWWA C901 and ASTM D2737 may be used for 1" service lines.

2.4. CONTRACTORS

The contractor shall conduct all work in such a manner that will not disturb the existing water line or contaminate drinking water in existing Waterworks' lines.

The contractor must take every precaution to keep water mains clean before and during installation to avoid unnecessary delays due to bacteriological contamination.

The contractor shall not expose, cut, tap into or connect to existing Waterworks' lines and shall not open or close any valves or any fire hydrants without first advising and securing permission of the Waterworks and a Waterworks' representative must be present.

The contractor must purchase water used for any purpose other than for pre-arranged flushing and testing of the water lines.

Any breakage of existing water lines or other utilities is the responsibility of the contractor.

2.5. INSTALLATION INSPECTION

The installation of water systems shall be inspected by the Waterworks' designated inspector and Waterworks' personnel for compliance with approved plans and specifications at the expense of the developer.

The contractor shall extend full cooperation to the inspector and any Waterworks' personnel in the course of making inspections and shall comply with all reasonable requests to observe work in progress and to review work which has already been performed. The inspector and Waterworks' personnel will be allowed an opportunity to inspect all lines, valves and fittings before being covered. Required pressure and leakage tests shall be witnessed by the inspector and by Waterworks' personnel.

The Waterworks shall be reimbursed for all fees and expenses incurred by the inspector, prior or concurrent with, requesting the Waterworks to approve the installation.

2.6. TESTING / DISINFECTION

Flushing, pressure tests and leakage tests for ductile iron, polyethylene and PVC pipe shall be performed in accordance to applicable sections of AWWA C600 at the pressures, time and allowable leakage stated below.

2.6.1. Flushing

Before testing and disinfecting, the pipeline shall be flushed clean with potable water. Flushing shall be accomplished through a stand pipe of the same diameter of the newly installed water main.

The contractor shall notify the District prior to filling or flushing new lines. The contractor shall not operate any valves in the Waterworks' system without securing permission. Waterworks' personnel shall be present prior to any flushing.

The contractor will be allowed four times the volume of water in the pipe being laid for flushing purposes. Any additional water required for flushing shall be charged to the contractor at the current water rates.

TESTING AND DISINFECTING WATER LINES (cont.)

2.6.2. Pressure and Leakage Test

Waterworks' personnel shall be present prior to the commencement of any pressure test. Each section of line between valves and/or a longer section if permitted by the Waterworks, shall be submitted to a hydrostatic pressure test and leakage test of 120 psi for not less than two hours.

Water lines being pressure tested must only be connected to a Waterworks' line by the use of a reduced pressure backflow assembly.

Each section of pipe to be tested shall be slowly filled with water, and all air expelled from the pipe through taps at points of highest elevation in the section to be tested. If hydrants or blow offs are not available at high spots in the line for air removal, taps shall be made to accommodate a standard 3/4" Mueller H-15000 corporation stop with Mueller threads, or equal, which shall be removed and the tap plugged with a brass plug upon completion of the test.

After the test pressure of 120 pounds per square inch has been obtained, verify all valves in the section being tested are open completely and commence to leakage test in accordance with AWWA C605-94 as follows: Leakage shall be defined as the quantity of water that must be supplied into the pipe section being tested to maintain a pressure within 5 psi of the specified leakage test pressure after the pipe has been filled with water and the air in the pipeline has been expelled. No installation will be accepted if the leakage is greater than that determined by the formula:

L = (ND X Square Root of P) Divided by 7,400

Where:
- L = allowable leakage, in gallons per hour
- N = number of joints in the length of pipeline tested
- D = nominal diameter of the pipe, in inches
- P = average test pressure during the leakage test, in pounds per square inch (gauge)

Leakage gallons per hour = (# of joints) X (Pipe Diameter) X (.00148)

All pressure test and leakage tests are performed at 120 psi.

TESTING AND DISINFECTING WATER LINES (cont.)

If any loss in pressure is noted during the two-hour test period, the contractor shall examine the pipeline and determine the source of the leakage. If leaks are found in a joint, the joint shall be disassembled, and necessary repairs made. Clamps shall not be used to repair leaks. Any cracked or defective pipes, fittings or specials discovered in consequence of this pressure test shall be removed and replaced with sound material at the contractor's expense. After repairs, the section of line shall be re-tested until a hydrostatic pressure and leakage test of 120 psi is maintained for not less than two hours.

TESTING AND DISINFECTING WATER LINES (cont.)

2.6.3. Leakage Test

Water lines being tested for leakage must only be connected to a Waterworks' line by the use of a reduced pressure backflow assembly.

The pipeline as a whole or in such sections as the Waterworks may designate, shall be tested to a pressure of 120 pounds per square inch. The 120 pounds per square inch pressure shall be held a sufficient time to allow a true evaluation of leakage and shall depend upon the length of line tested, except, that in no event shall the pressure be maintained for less than two hours. Suitable means shall be provided for determining the quantity of water lost by leakage during the final hydrostatic pressure test. No pipeline or portion thereof shall be accepted until or unless the leakage is within the limit of 0.00148 gallons per joint per inch of nominal pipe diameter per hour.

Any section of line that fails to meet the leakage test shall be repaired by the contractor and re-tested until the leakage is within the allowable limits. The Waterworks' employee must witness final pressure and leakage tests.

TESTING AND DISINFECTING WATER LINES (cont.)

2.6.4. Disinfecting

After completion of leakage tests, all parts of the pipelines installed shall be disinfected by the Department of Waterworks at $800.00 per 3000'. Disinfection shall conform to AWWA Standard C651. If the discharge of highly chlorinated water would be harmful to vegetation, wildlife, or the environment, measures must be taken to impound and neutralize the chlorinated water prior to discharging or to remove and dispose of in an approved manner, at no additional cost.

2.6.5. Chlorine Application

All new mains and services and any portion of existing mains repaired shall be chlorinated by the application of sufficient chlorine to provide a chlorine residual of not less than 10 ppm after the chlorine solution has been held in the pipeline for 24 hours. Mains should be sufficiently clean after proper precautions during laying and flushing of the line so that an initial application of 50 ppm of chlorine will produce the required residual. Additional chlorine may be necessary if the mains have not been kept clean. Calcium hypochlorite conforming to AWWA B300 is to be used for chlorination. Chlorine solution shall be applied at one end of the line being disinfected. Water shall be withdrawn from the opposite end and from the ends of all branches until the chlorine solution completely fills all lines to be disinfected. Valves and hydrants in the lines being chlorinated shall be operated while the chlorine solution is in the line.

2.6.6. Final Flushing

After the 24-hour retention period, the chlorine solution shall be flushed out of the lines for appropriate disposal and the lines filled with potable water. The lines shall then stand for 24 hours before samples are taken for bacteriological tests. Sample points shall be installed as directed by the Waterworks. Samples shall be taken by the Waterworks' personnel and submitted to the State Department of Health for bacteriological examination. If any samples show a positive reaction, that portion of the line represented by the sample shall be disinfected again and the flushing and sampling repeated. This procedure shall be repeated until all portions of the system are completely disinfected.

2.7. DIAGRAMS

2.7.1. Fire Hydrant

FIRE HYDRANT DETAIL
N.T.S.

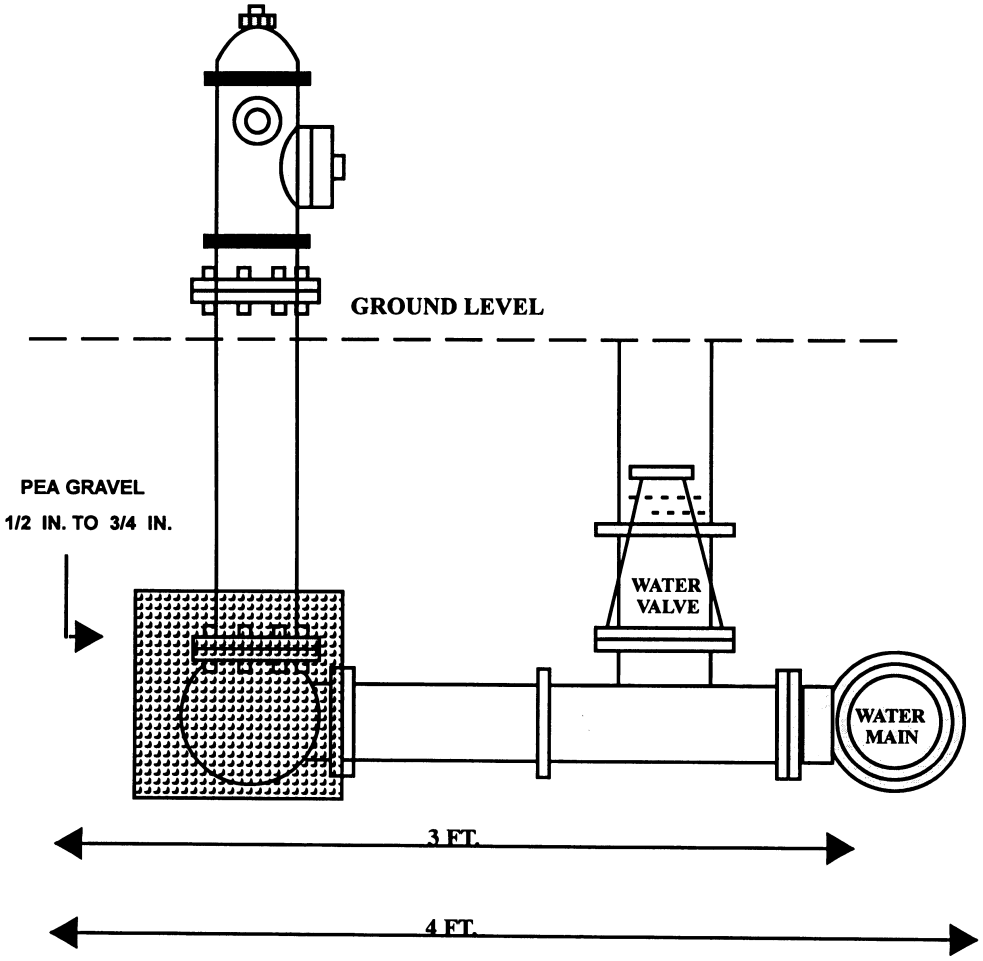

2.7.2. Canal Crossing

CANAL CROSSING CASING

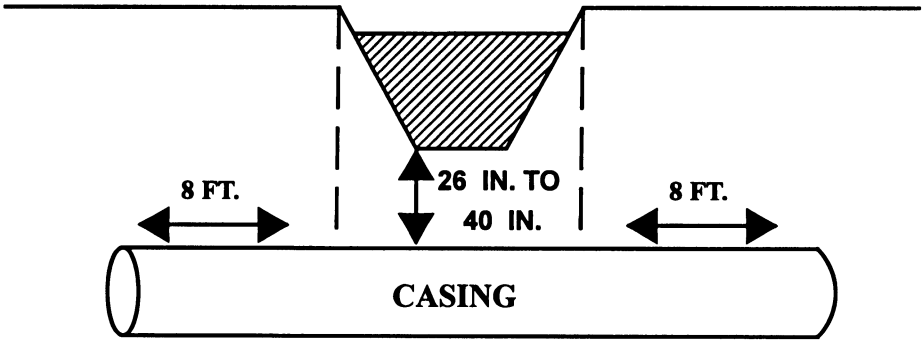

USE MECHANICAL JOINT DUCTILE IRON WATER MAIN WITH RETAINER GLANDS THROUGH THE CASING AND EXTEND AT LEAST 40 FEET BEYOND EACH END OF THE CASING.

WHEN REQUESTED, INSTALL A VALVE ON EACH SIDE OF THE CANAL WITH ROMAC GRIP RETAINERS ON PVC C900 WATER MAIN.

3. PIPE CASING

3.1. WATER MAIN CASING

Steel casing shall be a minimum of 0.50 inch thick and asphalt coating of 0.05 inch minimum thickness shall cover both inside and outside of the pipe. Sections of the pipe shall be connected by welding. Welds shall be coated with Kopper's Bitumastic or approved equal heavy bodied coal tar pitch protective coating. Major coating damage shall be cause for rejection.

Casing size shall be as follows unless otherwise listed on drawings:

Water Main Size	Casing Diameter Required For PVC Main	Ductile Iron Main
6"	12"	15"
8"	16"	18"
10"	18"	21"
12"	20"	24"
16"	26"	34"
20"	30"	36"
24"	33"	40"

Pipe casing shall be installed true to alignment and grade. Casing shall be installed by boring and/or jacking into place. All bores on or across highway and railroad rights-of-way shall be dry bores without the use of hydraulic flushing.

A 3” PVC Schedule 40 pipe shall be laid under all new streets that do not have water lines on each side of the road. The pipe shall be lined up with each property line on the opposite side of the road from the water line. The pipe shall be between 18” to 24” in depth and shall extend outward 12” past the outer edge of the compacted sub-base and shall be capped on each in.

3.2. PVC CASING DIAGRAM

PVC PIPE CASING

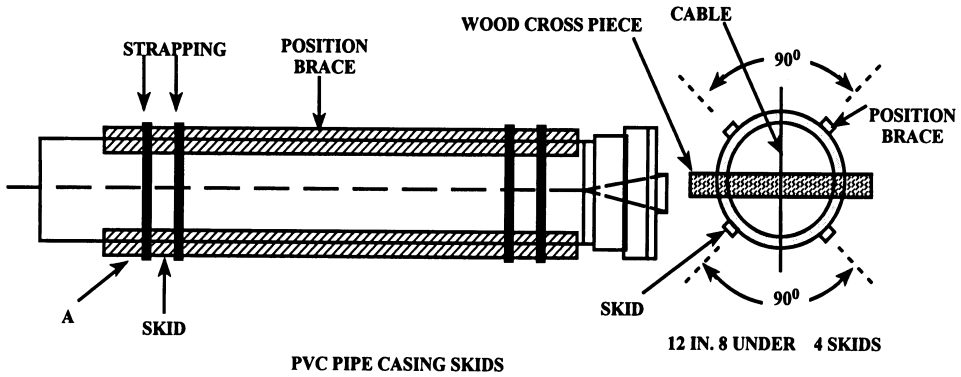

4. BACKFLOW PREVENTERS

4.1. POLICY

For a new service installation, an air gap or a reduced pressure backflow preventer must be installed for:

A. All services 2" and larger.
B. All industrial customers.

Backflow preventer installations must have prior approval of the Department of Waterworks.

All reduced pressure backflow preventers must be tested at least once a year at the customer's expense, by a tester/repairman that is approved by the Waterworks.

It shall be the duty of the customer/user at any premise where backflow preventers are installed, to have certified inspections and operational tests made at least once a year. In those instances where the Waterworks may deem necessary, more frequent certified inspections and operational tests may be required.

These inspections and tests shall be at the expense of the customer/user and shall be performed by the device manufacturer's representative or by a certified tester approved by the Waterworks.

The customer/user shall arrange for the inspection and tests and notify the Waterworks at least 24 hours in advance so that a Waterworks representative may witness the tests, if it is so desired. The backflow preventer shall be repaired, overhauled or replaced immediately at the expense of the customer/user whenever said device is found to be defective.

Copies of all records including tests, repairs and overhauls shall be submitted to the Waterworks. Original copies shall be kept on file by the customer/user and shall be made available to the Waterworks upon request.

Effective: 8-11-1981

Revised: 10-01-1982

4.2. APPROVED TYPES

APPROVED TYPES

SIZE	APPROVED MODELS	CONNECTIONS
3/4"	WATTS 909	THREADED UNION
	FEBCO 860	THREADED UNION
1"	WATTS 909	THREADED UNION
	FEBCO 860	THREADED UNION
2"	WATTS 909	THREADED UNION
	FEBCO 860	THREADED UNION
3"	HERSEY 6 CM	FLANGED
4"	HERSEY 6 CM	FLANGED
6"	HERSEY 6 CM	FLANGED

Backflow preventers shall have bronze bodies and bronze or stainless steel trim.

Backflow preventers 8" and larger shall be Watts 909 or Hersey Model 6 CM and must be epoxy coated.

A meter must be installed upstream before a backflow preventer.

Backflow preventer installations must have prior approval of the Waterworks Department.

Revised: 7-1-96

4.3. INSTALLATION

REDUCED PRESSURE BACKFLOW PREVENTER INSTALLATION REQUIREMENTS

The backflow preventer must be installed as close to the meter as possible. A filter screen is required, but if a screen has been installed before the meter, an additional screen is not required.

Each backflow preventer must have an inlet and an outlet valve. All in-line equipment should be flanged or installed with union connections for easy removal during repairs or testing. Test cocks are required.

A bypass installation of any type is prohibited.

The backflow preventer shall be installed with the following clearances:

At least 12" above the ground and 12" above the flood level whichever is the highest.

Not more than 30" above the ground or floor.

Not less than 24" clearance on the side the access door or discharge valve is located. Not less than 12" clearance on the opposite side.

Adequate overhead space to remove the unit for repairs.

The installation should be in an open area that would not be flooded by a full flow relief valve discharge. All equipment should be protected from freezing.

A parallel arrangement is recommended (see illustration).

Revised: 11-10-1982

4.3.1. Diagram

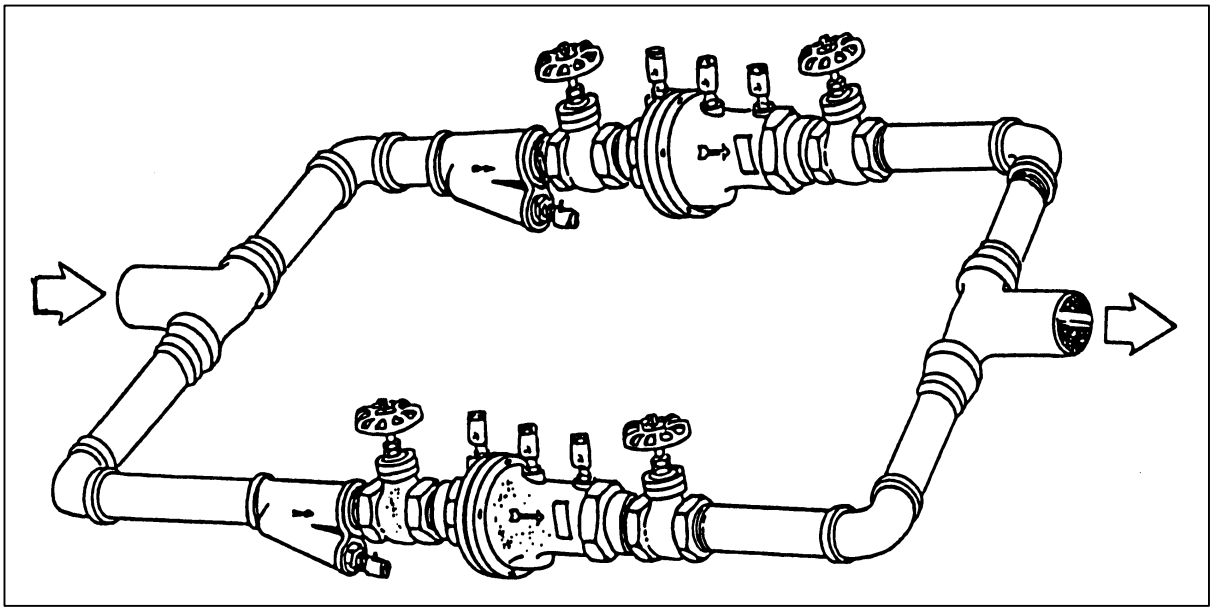

REDUCED PRESSURE BACKFLOW PREVENTER INSTALLATION REQUIREMENTS

PARALLEL ARRANGEMENT OF BACKFLOW PREVENTERS

5. SPRINKLER SYSTEMS

5.1. INSTALLATIONS

Sprinkler system installations must have a reduced pressure detector assembly Hersey Model 6 CM-RPDA or a Watts 909 RPDA, bronze or epoxy coated, installed in the main line.

A Sensus SR 5/8" x 3/4" meter must be installed across the check valve and routinely read to detect any unauthorized usage on the sprinkler line. This meter will be installed, read and billed at the minimum rate only, at the customer's expense.

A complete set of drawings of a proposed sprinkler system installation must be submitted to the Department of Waterworks for approval.

All taps, tie-ins and installations will be made at the customer's expense.

Policy: 9-9-1980
Revised: 3-13-1997

5.2. DIAGRAMS

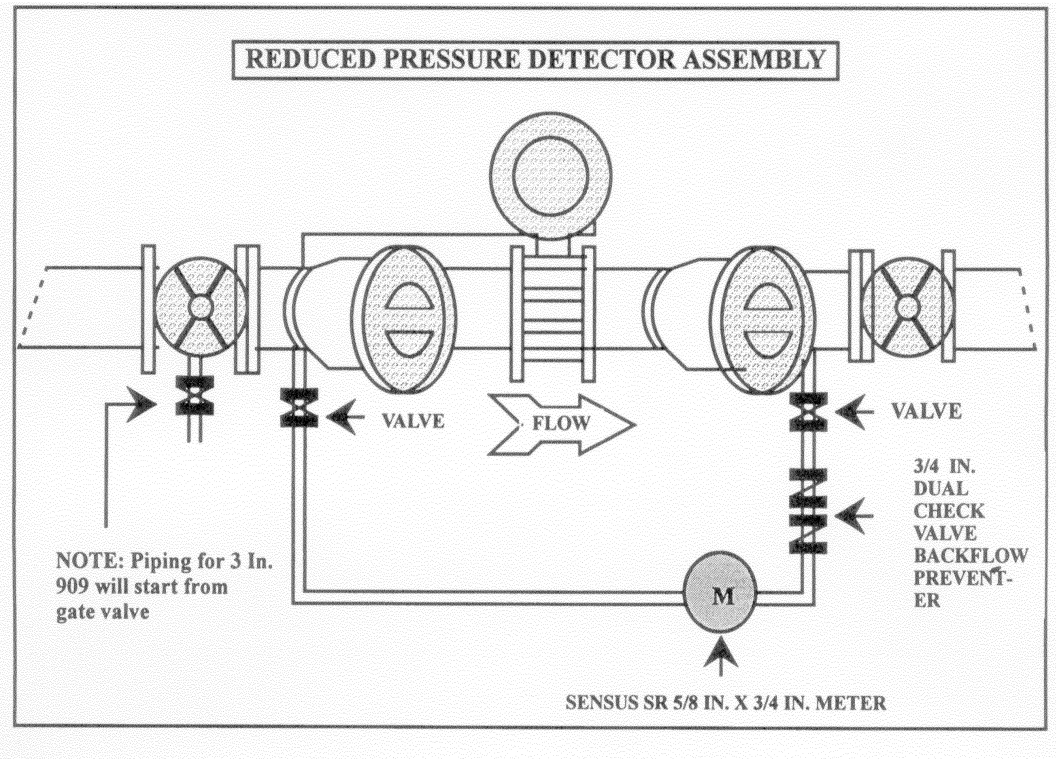

REDUCED PRESSURE DETECTOR ASSEMBLY MUST BE INSTALLED A MINIMUM OF 24" ABOVE GROUND GRADE.

DETECTOR CHECK VALVE:	**HERSEY MODEL 6 CM-RPDA** **OR** **WATTS MODEL 909RPDA** **BRONZE OR EXPOXY COATED** **FLANGED ENDS** **INSTALL HORIZONTALLY**
DUAL CHECK VALVE:	**ONE WATTS MODEL 7 DUAL CHECK VALVE BACKFLOW PREVENTER**

Hersey® PRODUCTS

Model 6CM-RPDA

Reduced Pressure Detector Assembly
Sizes 4″-6″-8″-10″

FEATURES

- Exclusive Aergap® system protection.
- Hot-dipped galvanized or epoxy-coated cast iron body.
- Smooth transition from low to high flow rates.
- Replaceable seats and springs.
- Rugged one piece body construction for long dependable service.
- Standard OS&Y gate valves.
- In-line maintenance.
- Test cocks for in-line field testing.
- Internal sensing passage.

Approval by: USC

DESCRIPTION

Offering the combined features of a reduced pressure backflow prevention assembly and a detector check, the Hersey Model 6CM-RPDA helps control cross-connections that present a health-hazard, while also detecting leakage or unauthorized use of water.

The mainline unit consists of two independent spring loaded, poppet-type, check valve assemblies, and a relief valve, all mounted in a common body. The relief valve is a diaphragm actuated, spring loaded assembly. Two gate valves (OS&Y standard) and four test cocks for field testing complete the basic features of the mainline unit.

The bypass consists of an approved reduced pressure assembly, two shutoff valves, four testcocks, and a meter with low flow accuracy.

OPERATION

Normal operation - The independent, spring loaded check valves remain closed until there is a demand for water. Low flow is routed through the bypass, and volume recorded on a Hersey Positive Displacement Meter. The relief valves on the mainline and the bypass remain closed because of the differential between the supply pressure and the reduced pressure in the zone between the check valves.

Backpressure - In the event pressure increases downstream, tending to reverse direction of flow, both check valves in the mainline and the bypass are closed to prevent backflow. If the second check valve in either the mainline or the bypass is prevented from closing tightly, leakage into the reduced pressure zone increases pressure and will cause the relief valves to open.

Backsiphonage - If the supply pressure drops to atmosphere or lower than the reduced pressure zone, the relief valves in the mainline and the bypass will open, creating an internal air gap in both assemblies.

APPLICATION

For use at cross-connections when the danger from backflow presents a health-hazard. A primary application is installation in fire lines to detect leaks or unauthorized use of water.

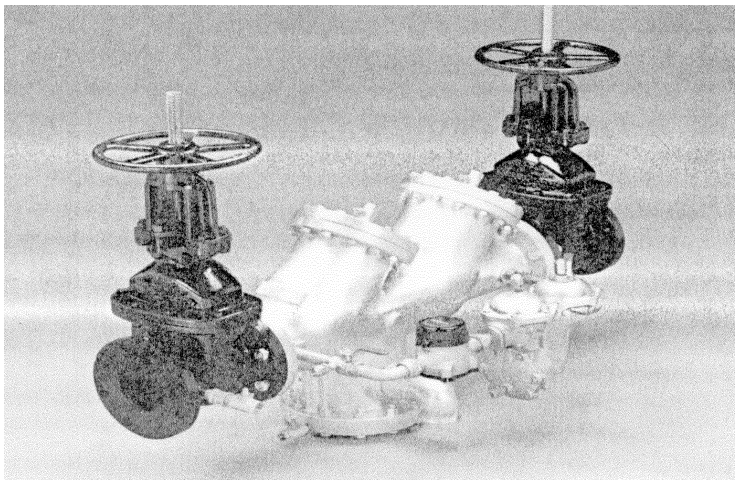

Model 6CM-RPDA

Reduced Pressure Detector Assembly

PERFORMANCE (Performance curves are typical only and not a guarantee of performance)

Head Loss - 4″ and 6″

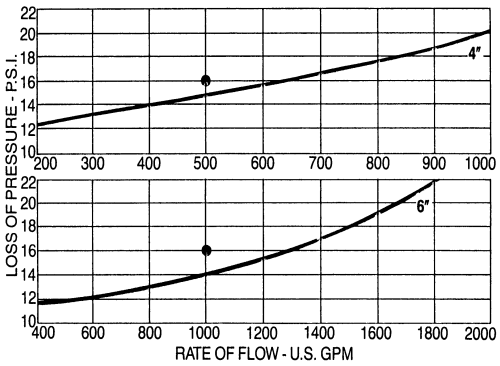

Head Loss - 8″ and 10″

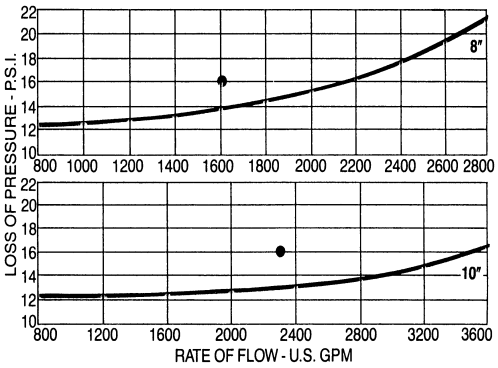

Note: • Maximum Allowable Pressure Loss allowed by USC at indicated flow.

DIMENSIONS

SIZE	4″	6″	8″	10″
A	47 1/2″	62″	75 1/2″	88″
B	10 3/4″	12″	21 1/4″	22 3/8″
C	4 1/2″	5 1/2″	7″	8 1/2″
D	25″	32 3/4″	41 1/2″	48 1/2″
E	20 3/4″	26 1/2″	32 1/2″	38″
F	48 3/4″	63 7/8″	78 1/4″	91 1/4″
G	5 1/4″	6 1/4″	8 1/2″	10 1/4″
H	10 5/8″	9 1/2″	11″	13″
J	13 3/8″	12 1/2″	13 3/4″	15 3/4″

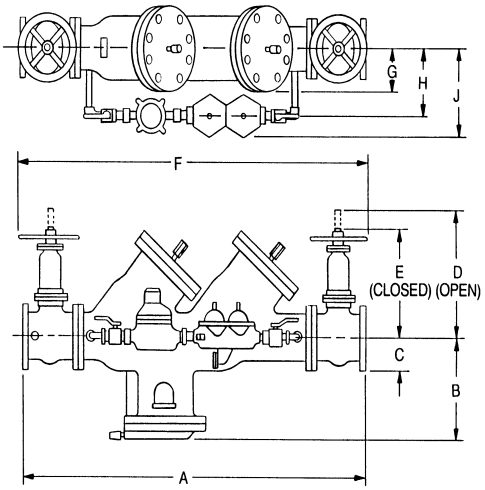

WEIGHT

SIZE	4″	6″	8″	10″
Net Wt.	510	920	1850	2880
Gross Wt.	580	1075	2050	3200

MATERIALS AND SPECIFICATIONS

Mainline body ..... hot-dipped galvanized or epoxy-coated cast iron.
Bypass body (FRP II) ..... bronze
Bypass meter ..... Hersey Positive Displacement Meter
Working parts (mainline) ..... bronze and stainless steel
Springs (mainline) ..... stainless steel*
Diaphragms (mainline) ..... reinforced elastomer
Check and relief valve discs (mainline) ..... silicone rubber
Maximum rated working pressure ..... 175 psi
Hydrostatic test pressure ..... 350 psi
Temperature range ..... 33° - 100°F

*8″ and 10″ mainline, springs are carbon steel vinyl-coated.

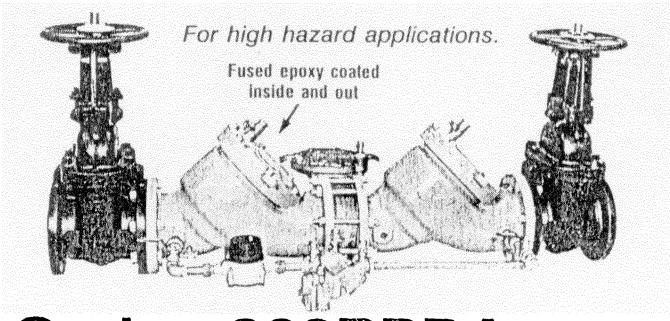

Series 909RPDA Sizes 3'' to 10''

Reduced Pressure Detector Assembly for Fire Protection System Supply Mains

Designed exclusively for use in accordance with water utility authority containment requirements. Used to prevent the backflow of non-potable fluids into the potable water supply system and detect system leaks or unauthorized use water supply. Suitable for supply pressures up to 175 PSI and water temperatures to 110°F maximum. Furnished with UL/FM listed outside stem and yoke (OS&Y) resilient-wedge gate valves and bronze body ball valve test cocks.

- **Fused epoxy coated cast iron body**
- **Furnished with bronze 5/8'' x 3/4'' recordall CFM meter, Model 25**
- **No special tools required for servicing**
- **Captured spring assemblies**

OPTIONS (Suffix):
GPM - with gallons per minute meter
LF - without shut-off valves

Note: Piping for 3'' 909 will start from #1 gate valve and connect at #2 check valve.

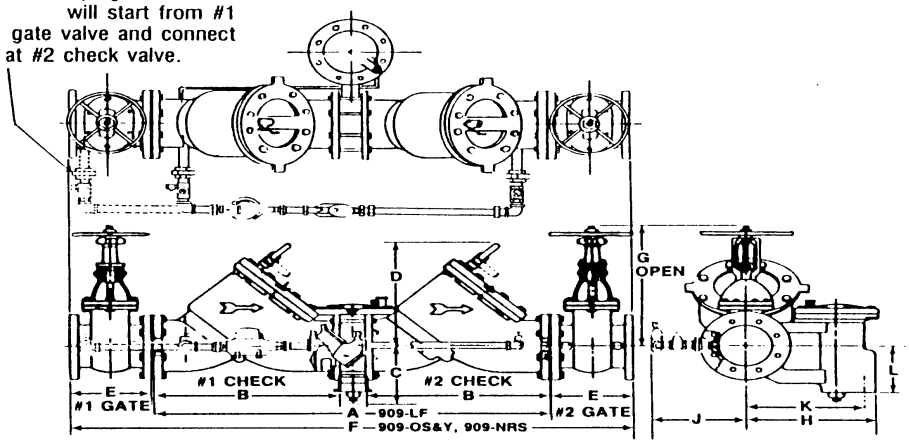

Size (Inches)	DIMENSIONS (Inches) A	B	C	D	E	F	G	H	J	K	L	Weight (lbs.)
3''	26 1/8	12	5 1/4	7	8	42 1/4	18 1/2	9	14	7 5/8	4 1/4	230
4''	37	17	6	9 1/2	9	55 1/8	23 3/4	13 5/8	15	11 3/4	5 7/8	470
6''	44 1/2	20 3/4	6	14 1/2	10 1/2	65 1/2	32 1/2	13 5/8	16	11 3/4	6	798
8''	55 1/4	26	9 3/4	18 1/2	11 1/2	78 3/4	39 1/4	18 1/2	17	16 3/8	8 5/8	1456
10''	67 1/2	32	9 3/4	21 1/2	13	93 5/8	48	18 1/2	18	16 3/8	8 5/8	2230

5.3. ANTI-FREEZE PROTECTION

DEPARTMENT OF HEALTH
NEW ORLEANS, LA 70160
Bulletin 1969-1 January 8, 1969

SUBJECT: Building Fire and/or Sprinkler Systems Chemical Anti-freeze Protection

FROM: James F. Coerver, Head
Division of Engineering
Louisiana State Department of Health

TO: Waterworks Superintendents and
Plumbing Inspection Departments

The possibility has recently been brought to our attention that toxic materials may be in use as freeze protection to building fire and/or sprinkler systems. These systems are normally connected directly to the public water facilities and therefore the use of any toxic materials therein would jeopardize the public water facilities as well as the potable water piping of the building.

It is our understanding that etheylene glycol Is being used In some systems. The extensiveness of its use is not known. Etheylene glycol is the chemical commonly used in automobile radiators as "permanent" type antifreeze. It is highly toxic.

We have generally accepted the National Fire Protection Association's recommendation as cited In their bulletin #13 as regards the use of antifreeze in building sprinkler systems. A summary of these recommendations follow:

1. Where the building fire and/or sprinkler system Is tied directly Into the potable water facilities without any protection against backflow, no chemical additives for freeze protection is acceptable.
2. Where the building fire and/or sprinkler system Is tied directly Into the potable water facilities with a check valve provided for backflow protection, the following freeze protection chemicals can be used:
    1. Glycerin U.S.P. food grade, or;
    2. Propylene Glycol

It Is recommended that your department survey building fire and/or sprinkler systems served by your water facilities to assure that unapproved chemicals are not being used and that check valves are provided on those systems where acceptable chemicals are being used.

cc: Parish Health Units
Regional Health Offices

6. WATER MAIN DEFLECTION

6.1. PIPE DEFLECTION

Pipe joint deflection shall not exceed 75% of the manufacturer's recommended allowable.

6.2. DIAGRAMS / CHARTS

PVC PIPE — DESIGN AND INSTALLATION

Table 13
Allowable Longitudinal Bending for Pressure Class Pipe
(AWWA C900, CI Size) in 20 ft Lengths at 73.4° F (23° C)
(Cell Class 1245B, PVC 1120, S_b = 800 psi, E = 400,000 psi)

Nominal Size *in.*	4	6	8	10	12
DR 14 (PC 200)					
D_o, in.	4.800	6.900	9.050	11.100	13.200
t_{nom}, in.	0.364	0.523	0.685	0.841	1.000
D_i, in.	4.072	5.854	7.680	9.418	11.200
I, in.^{4}	12.562	53.62	158.5	385.4	717.9
M, in. lbs.	4,187.0	12,434.0	28,021.0	55,552.0	87,018.0
R_b, in. (min)	1,200.0	1,725.0	2,263.0	2,775.0	3,300.0
R_b, ft. (min)	100.0	144.0	189.0	231.0	275.0
β degrees	11.5	8.0	6.0	5.0	4.2
α degrees	5.7	4.0	3.0	2.5	2.1
A, in.	24.0	17.0	12.0	11.0	9.0
P, lbs.	30.0	80.0	170.0	370.0	560.0
Ratio R_b/D_o	250.0	250.0	250.0	250.0	250.0
DR 18 (PC 150)					
D_o, in.	4.800	6.900	9.050	11.100	13.200
t_{nom}, in.	0.283	0.406	0.533	0.654	0.777
D_i, in.	4.234	6.088	7.984	9.792	11.646
I, in^4	10.28	43.83	129.8	293.9	587.3
M, in. lbs.	3,426.0	10,163.0	22,947.0	42,363.0	71,187.0
R_b, in. (min)	1,200.0	1,725.0	2,263.0	2,775.0	3,300.0
R_b, ft. (min)	100.0	144.0	189.0	231.0	275.0
β degrees	11.5	8.0	6.0	5.0	4.2
α degrees	5.7	4.0	3.0	2.5	2.1
A, in.	24.0	17.0	12.0	11.0	9.0
P, lbs.	20.0	70.0	140.0	280.0	460.0
Ratio R_b/D_o	250.0	250.0	250.0	250.0	250.0
DR 25 (PC 100)					
D_o, in.	4.800	6.900	9.050	11.100	13.200
t_{nom}, in.	0.204	0.293	0.384	0.471	0.560
D_i, in.	4.392	6.314	8.282	10.158	12.080
I, in.^{4}	7.792	33.25	98.33	222.5	445.0
M, in. lbs.	2,597.0	7,709.0	17,384.0	32,072.0	53,939.0
R_b, in. (min)	1,200.0	1,725.0	2,263.0	2,775.0	3,300.0
R_b, ft. (min)	100.0	144.0	189.0	231.0	275.0
β degrees	11.5	8.0	6.0	5.0	4.2
α degrees	5.7	4.0	3.0	2.5	2.1
A, in.	24.0	17.0	12.0	11.0	9.0
P, lbs.	20.0	50.0	100.0	210.0	350.0
Ratio R_b/D_o	250.0	250.0	250.0	250.0	250.0

Assuming that the bent length of pipe conforms to a circular arc after backfilling and installation, (Figure 7), the minimum radius of the bending circle R_b can be found by Timoshenko's equation:

$$R_b = \frac{EI}{M'} \text{in.} \qquad \textit{Eq 20}$$

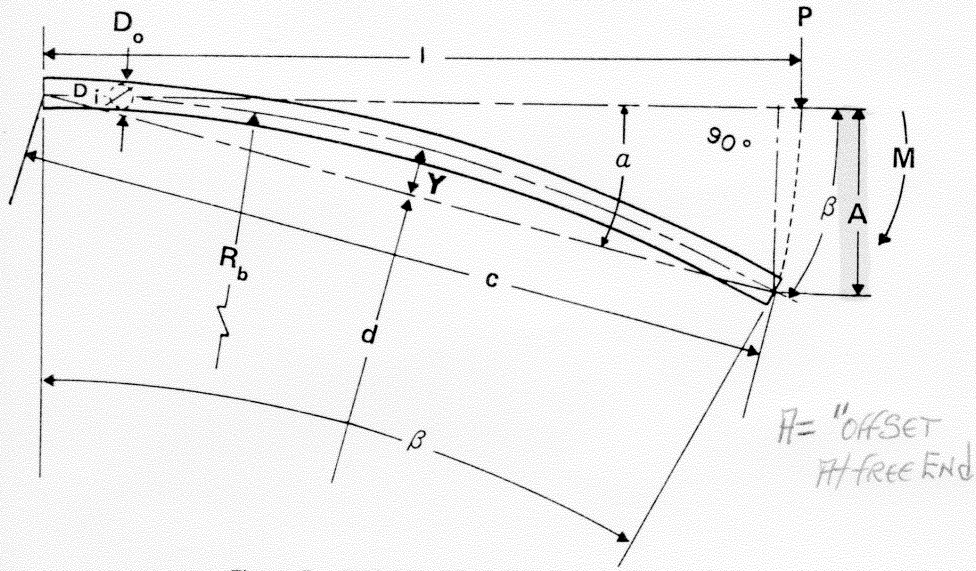

Figure 7. PVC Pipe Longitudinal Bending

Combining Equations 18 and 20 gives

$$R_b = \frac{ED_o}{2S_b} \qquad \textit{Eq 21}$$

The central angle β subtended by the length of pipe is

$$\beta = \frac{360L}{2\pi R_b} = \frac{57.30L}{R_b} \qquad \textit{Eq 22}$$

Where:
L = Pipe length, in.
R_b = Minimum bending radius, in.
M = Bending moment in. lb
E = Modulus of tensile elasticity, psi
S_b = Allowable bending stress, psi

L and R_b are both in the same units, and the angle of lateral def[illegible]ion (α) of the curved pipe from a tangent to the circle is:

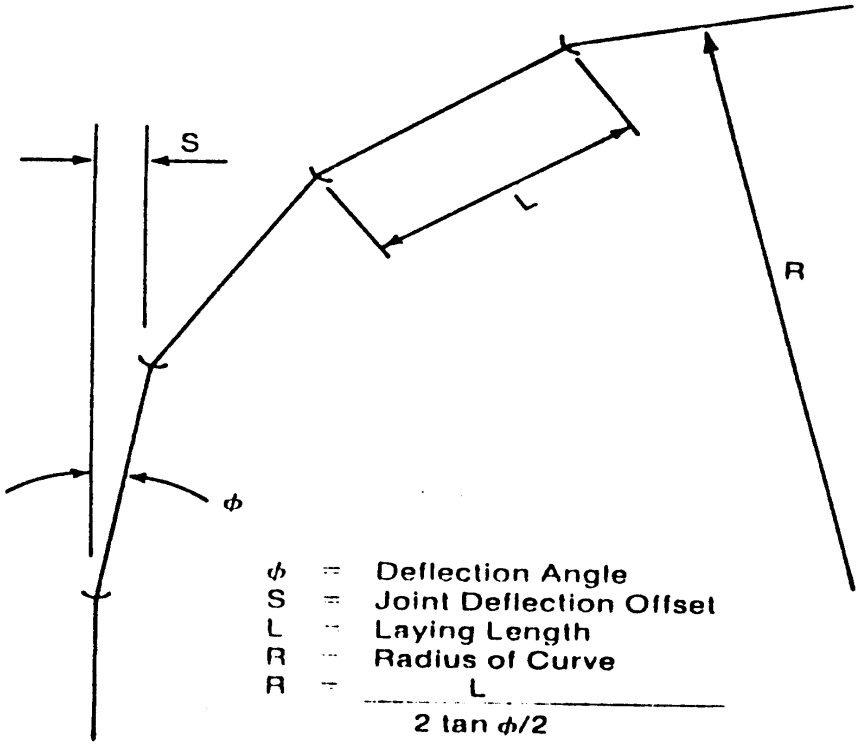

Figure 4. Pipeline Curve Geometry

12 AWWA C600-82

TABLE 5

Maximum Joint Deflection Full-Length Pipe—Mechanical-Joint Pipe DI

Nominal Pipe Size *in.*	Deflection Angle—θ *deg*	Maximum Offset—S* *in. (m)* 18 ft (5.5 m) L*		Approx. Radius of Curve—R* Produced by Succession of Joints *ft (m)* 18 ft (5.5 m) L*	
				125 (38)	
4	8-18	31 (0.79)		125 (38)	
6	7-07	27 (0.69)		145 (44)	
8	5-21	20 (0.51)		195 (59)	
10	5-21	20 (0.51)		195 (59)	
12	5-21	20 (0.51)		195 (59)	
16	3-35	13½ (0.34)		285 (87)	
18	3-00	11 (0.28)		340 (104)	
20	3-00	11 (0.28)		340 (104)	
24	2-23	9 (0.23)		450 (137)	
30	2-23	9 (0.23)		450 (137)	
36	2-05	8 (0.20)		500 (152)	
42	2-00	7½ (0.19)		510 (155)	
48	2-00	7½ (0.19)		510 (155)	

*See Figure 4.

7. ROADS

7.1. ROAD SURFACES

Asphaltic surfaces shall meet State of Louisiana, Department of Highways Specification (Section 502) Type 1, AC-3. The base course shall be spider webbed with a tack coat of AC-3 asphalt and the side of an existing asphalt cut shall be painted with an approved asphalt to assure a seal. Hand spreading may be used. Compaction shall be in accordance with paragraph 502.09 of the aforementioned specifications for Type 1. 92% minimum Briquette Density.

Concrete surfaces including sidewalks, shall have 2500-pound compression strength at 29 days. All pavements to be replaced that originally contained steel reinforcement shall be reinforced with welded steel fabric weighting not less than 75 pounds per 100 square feet. Finish surface to match existing pavement.

Rock for roadway repair shall be limestone with not more than 10% foreign matter by dry weight when determined by washing.

8. APPROVED METER TYPES

8.1. Approved Meter Types

SIZE	MAKE
5/8 " x 3/4"	**Sensus Positive Displacement**
1"	**Sensus Positive Displacement**
2"	**Sensus Model W- 160 DR Turbo Meter, Flanged**
3"	**Sensus Model W- 350 DR Turbo Meter, Flanged**
4"	**Sensus Model W-1000 DR Turbo Meter, Flanged**
6"	**Sensus Model W-2000 DR Turbo Meter, Flanged**

All meters shall read in U.S. gallons and the main cases shall be bronze.

The meter should be sized based on flow rates rather than pipe size.

5/8" X ¾" and 1" Water Meter Installations

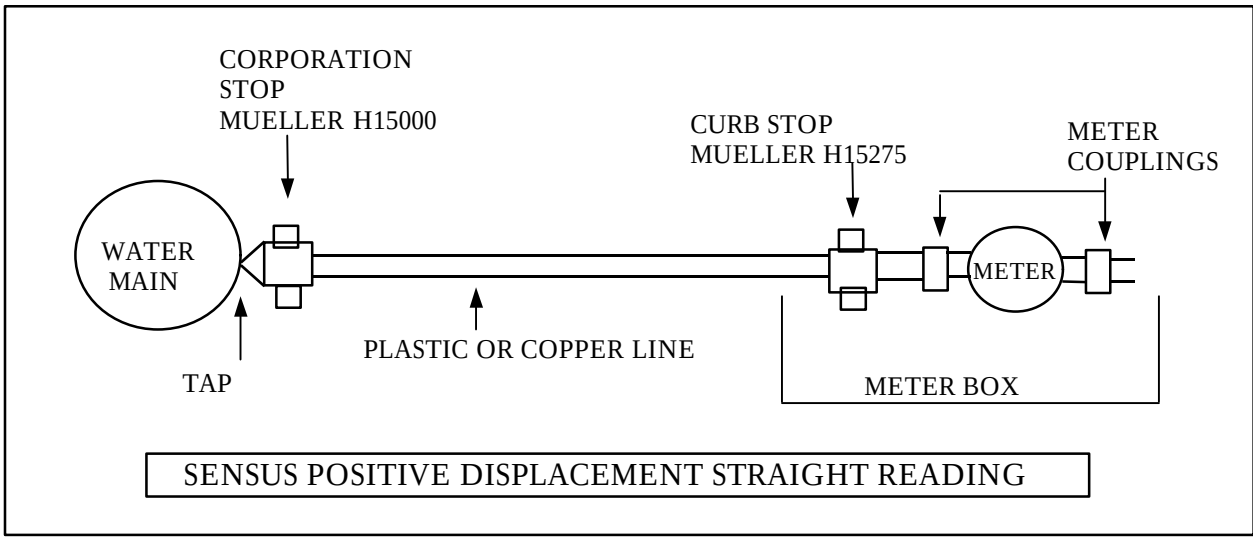

APPROVED METER TYPES (cont.)

2” Water Meter Installation

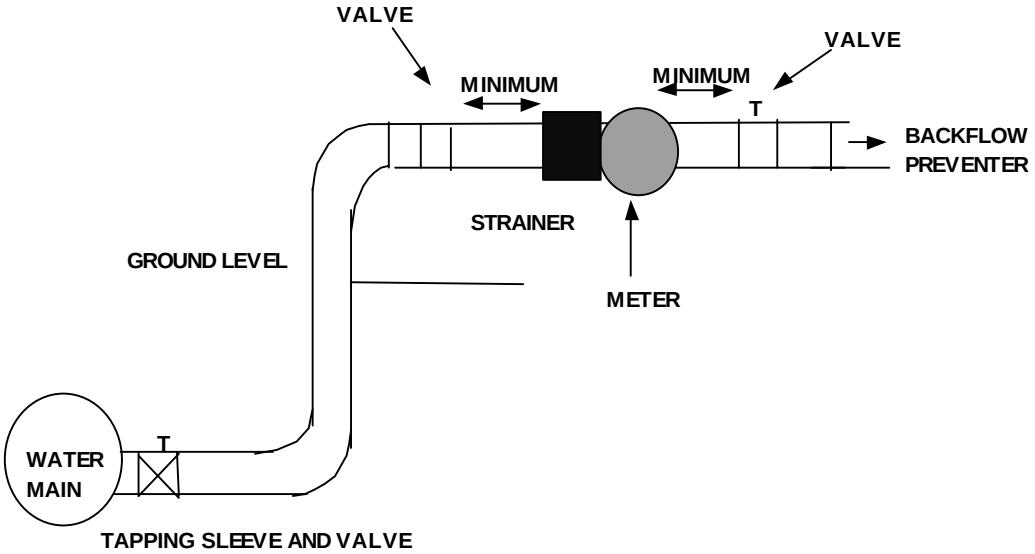

Installation:	**By Waterworks or customer.**
Meter:	**Sensus Model W-160 DR Turbo, double oval flanged.** **Install at same horizontal level as backflow preventer.**
Strainer:	**Sensus 2" DN Bronze Strainer or approved equal, with stainless steel screen.** **Strainer shall be connected directly to the meter.**
Saddle:	**For 6" main - Mueller 2552 or approved equal.** **For 8" main - Mueller 2860 or approved equal.**
Valve:	**2" brass gate valve.**
Backflow Preventer:	**Furnished and installed by customer (refer to specifications).**
2" Pipe:	**Schedule 80 PVC or brass.**

APPROVED METER TYPES (cont.)

3” or Larger Water Meter Installations

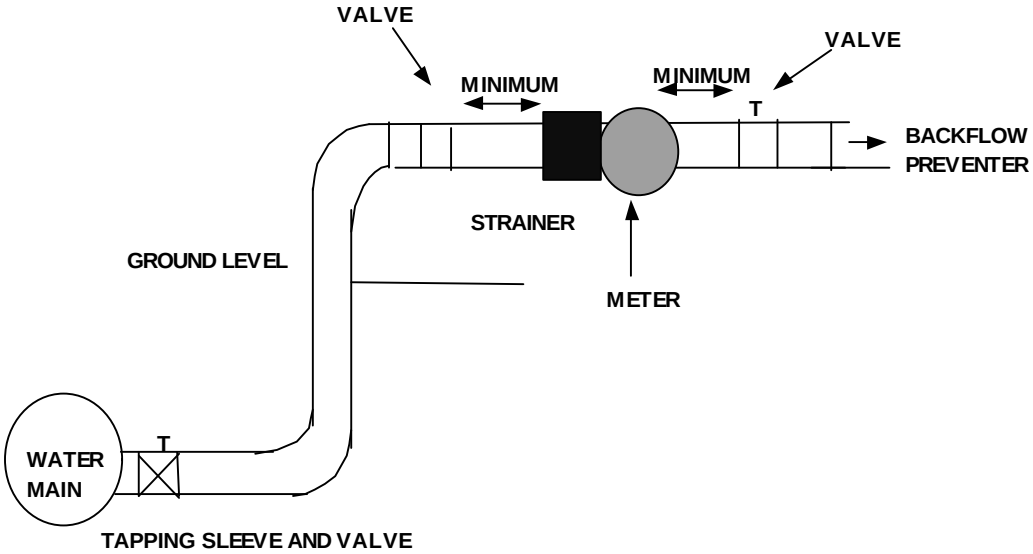

Installation:	**Material furnished and installed by customer.**
Meter:	**Refer to meter specifications.** **Install at same horizontal level as backflow preventer.**
Strainer:	**Sensus Bronze Strainer or approved equal, with stainless steel or bronze screen.** **Strainer shall be connected directly to the meter.**
Tapping Sleeve/Valve:	**Sleeve shall be stainless steel Smith-Blair 662 or 663 or JCM 432 or Romac SST with Mueller A-2370-16 valve or approved equal.**
Pipe:	**Cement lined ductile (refer to specifications).**
Minimum Length:	**5 times pipe diameter in inches.**
Line Valve:	**Resilient seat A2370-20 Mueller flanged full open gate valves.**
Backflow Preventer:	**Furnished and installed by customer (refer to specifications).** **Parrallel backflow preventers are recommended for uninterrupted water service during backflow preventer maintenance.**

9. WATER MAIN DISINFECTION

9.1. CHLORINATION

$$\text{Lbs of Chlorine} = \left(\frac{\text{Volume of Water}}{\text{Mg Water}} \right) \times \frac{8.34\ \text{Lbs}}{\text{Gal}} \times \left[\left(\frac{\text{ppm desired}}{\frac{\text{\% of Chlorine}}{100}} \right) \right]$$

$$\text{Volume: M Gallons} = \frac{\frac{\pi D^2}{4} \times \text{Length} \times 7.48\ \frac{\text{Gal.}}{\text{Ft}^3}}{1{,}000{,}000}$$

HTH = 65% Cl_2 ,

$$\text{Lbs of Chlorine} = \text{PPM} \times \text{Length (Ft)} \times D^2\ \text{(Ft)} \times \left(\frac{\pi\ 7.48 \times 8.34}{4 \times .65 \times 1{,}000{,}000} \right)\ \text{Lbs}$$

@ 50 PPM,

$$\text{Lbs of Chlorine} = \text{Length (Ft)} \times [\text{Diameter (Ft)}]^2 \times .003769\ \text{Lbs}$$

10. RIGHT-OF-WAY

10.1. POLICY

All right-of-way dedications to the Waterworks must be a minimum of fifteen feet (15') centered on the water main. (Adopted: 4-10-1984)

10.2. DEFINITIONS

Easement: An interest in land owned by another that entitles its holder to a specific limited use or enjoyment.

Servitude: A right by which something (as a piece of land) owned by one person is subject to a specified use or enjoyment by another.

Right-of-way: A legal right of passage over another person's ground. The strip of land over which is built a public road. The land used by a public utility (as for a transmission line).

10.3. RIGHT-OF-WAY FORM

RIGHT OF WAY IN FAVOR OF	*	UNITED STATES OF AMERICA
THE ST. CHARLES PARISH	*	STATE OF LOUISIANA
DEPARTMENT OF WATERWORKS	*	PARISH OF ST. CHARLES

BE IT KNOWN, that the _____ appearing herein through its President _____; hereinafter referred to as "OWNERS";

AND:

ST. CHARLES PARISH, a political subdivision the State of Louisiana through its Department of Waterworks, a duly created Department in accordance with the St. Charles Parish Home Rule charter, herein represented by Chris A. Tregre, Parish President, 15045 River Road, P.O. Box 302, Hahnville, Louisiana 70057, hereinafter referred to as "WATERWORKS";

WITNESSETH THAT THE "OWNERS" DO DECLARE that it is hereby granted unto the "WATERWORKS", its successors and assigns, a servitude fifteen feet (15') wide and running along the property as described below. The servitude has for its exclusive purpose the right of the "WATERWORKS" to maintain, inspect, operate, repair, remove or relay the water main and to do whatever else is necessary to maintain the water system in operating condition.

The "WATERWORKS" holds "OWNERS" free and harmless from any and all claims for damages, injury or death, and any liabilities, costs or expenses arising out of or attributable to the exercise of the rights herein granted. The provisions of this paragraph shall not apply to any such liabilities or damages caused by the sole negligence of the "OWNERS".

The "OWNERS" do hereby grant to the "WATERWORKS" and subrogate said "WATERWORKS" to the right of the fifteen foot (15') easement described as follows:

The above described property is the required fifteen foot (15') servitude and it being for the exclusive use of the "WATERWORKS" as set forth herein.

TO HAVE AND TO HOLD said easements, rights, and rights of way unto the said "WATERWORKS", its successors and assigns until said easement be exercised, and so long thereafter as the same shall be useful for the above named purposes.

THIS DONE AND PASSED in the town of _____, Louisiana, on the _____ day of _____, 1998 in the presence of _____ and _____, competent witnesses, who hereunto sign their names with said appears and me, Notary, after due reading of the whole.

WITNESSES:

_____ BY: _____

_____ ST. CHARLES PARISH
DEPARTMENT OF WATERWORKS

BY: _____
Chris A. Tregre
Parish President
St. Charles Parish

STATE OF LOUISIANA

PARISH OF ST. CHARLES

Before me, personally came and appeared:

_____

who, after being duly sworn, deposed and said that (he)(she) witnessed the above signature and that said signature above is true and genuine and was signed in the presence of the witness whose name is affixed thereto.

WITNESS:

_____ _____

_____

Done and signed before me, this _____ day of _____, 1998,

_____
Notary Public

11. HIGHWAY DEPARTMENT

11.1. PERMIT FEES

STATE OF LOUISIANA
DEPARTMENT OF TRANSPORTATION AND DEVELOPMENT
P. O. Box 94245
Baton Rouge, Louisiana 70804-9245

EDWIN W. EDWARDS
GOVERNOR

February 21, 1994

JUDE W. P. PATIN
SECRETARY

ST. CHARLES PARISH WATER DISTRICT NO. 2
POST OFFICE BOX 108
LULING, LOUISIANA 70070

ATTENTION: MR. JACK SPIERS

Re: Annual Permit Fees

Gentlemen:

Due to recent legislation, we are required to ascertain information from all utilities concerning the number of customers they serve or the number of parishes in which they operate.

Please fill in the appropriate information on the enclosed sheet for our records and return to:

Louisiana Department of Transportation and Development
Utility & Permit Section 41 Room 524
P. O. Box 94245
Baton Rouge, LA 70804 9245

If you have any questions concerning this matter, please contact Ms. Karla Kemp at (504)379 1510.

Yours very truly,

EUGENE P. WAGUESPACK, P. E.
DIRECTOR OF CONSTRUCTION AND MAINTENANCE

JOHN COLLINS, P. E.
HEADQUARTERS UTILITY & PERMIT ENGINEER

JC/krk
ATTACHMENT

Do you own facilities within State highway right of way that run parallel to the highway?

✓ yes ___ no

Do you own facilities that cross under or over a state highway?

✓ yes ___ no

_____ <100 customers

_____ 101 500 customers

_____ 501 6000 customers

✓ >6000 customers

If you are a transmission pipeline please indicate how many parishes you operate in. _____

Please indicate your main or "billing" address below if it is different from the address above.

ST. CHARLES PARISH, DEPARTMENT OF WATERWORKS
POST OFFICE BOX 108
LULING, LA 70070

STCHARW2

NOTE: THIS IS FOR WATER DISTRICTS No 1 + No 2 WHICH WERE CONSOLIDATED DURING 1989.

Jack Sivers
2-25-94

PARISH OF ST. CHARLES
DEPARTMENT OF LEGAL SERVICES
116 Lakewood Drive • Luling, Louisiana 70070
(504) 785-2076 or (504) 785-9283 • FAX: (504) 785-6056

CHRIS A. TREGRE
PARISH PRESIDENT

RANDY O. LEWIS
PARISH ATTORNEY

May 25, 1994

Ms. Kathleen LeBlanc
Department of Waterworks
P. O. Box 109
Luling, LA 70070

Re: Utility Operator's Highway Occupancy Permit Fees

Dear Ms. LeBlanc:

Please be advised that I have spoken with Carla Kemp with the Department of Transportation and Development concerning the Occupancy Permit Fees. Ms. Kemp has advised me that we are to only pay the $700.00 bill. In addition, the Council had previously paid the $20.00 bill so it will only be necessary for you to send a check for $680.00. Next year we will only receive one bill.

If you should have any questions, please do not hesitate to contact me.

Best regards,

Dawn H. Higdon
Legal Assistant I

STATE OF LOUISIANA
DEPARTMENT OF TRANSPORTATION AND DEVELOPMENT
P.O. Box 94245
Baton Rouge, Louisiana 70804-9245

March 17, 1994

EDWIN W. EDWARDS
GOVERNOR

JUDE W. P. PATIN
SECRETARY

ST. CHARLES PARISH DEPT. OF WATERWORKS
POST OFFICE BOX 108
LULING, LOUISIANA 70070

ATTENTION: MR. JACK SPIERS

Attached are the Louisiana Revised Statute 48:381 and rules concerning fees for use of highway right-of-way. The deadline for submitting payment has been extended to April 30, 1994.

If you have been billed incorrectly, please contact the Right-of-way Permit Office at (504)379-1510. Note that this statute defines 'Utility Operator' and 'Transmission Pipeline' very broadly, to include all facilities placed in highway right-of-way.

INVOICE

(Utility Operator's Highway Occupancy Permit Fee)

DESCRIPTION	AMOUNT
Annual cost for permits within highway right-of-way.	$700.00
This invoice is due and payable upon receipt. **Please remit payment to:** **DOTD R/W Permit Office - Room 524** **P. O. Box 94245** **Baton Rouge, Louisiana 70804-9245** **Return DOTD copy with payment.**	

STCHARW2

430-420544-440
DOTD R/W Permit fee
K. LeBlanc

OPERATOR COPY

23. La. R.S. 48:381. Use and Occupancy of Highways

a. When not inconsistent with the purposes of state highways, the chief engineer may issue permits for the use and occupancy of the rights-of-way state *highways as* follows:

1) For the installation, operation and maintenance of underground pipes, conduits, or cables along or across the highways for the purpose of transporting or conveying fluids, telephone or telegraph messages, cable television signals, gases, or electric current for any purpose.

2) For the installation, operation, and maintenance of overhead cables, pipes, conduits or wires, together with appropriate supporting structures, for the conveying or transporting of fluids, telephone or telegraph messages, cable television signals, or electric current for any purpose.

3) For the erection, operation, and maintenance of structures crossing the highway over or beneath the traveled surface for the purpose of providing transcommunication for vehicles, pedestrians, cattle or railway rolling stock.

4) For the erection, operation, and maintenance of structures for the shelter of waiting passengers at designated transit stops of a public transit system, provided that the municipality, parish, or other political subdivision which erects, operates, maintains, or owns the structure or structures under permits issued hereunder shall indemnify the state and its departments and agencies against any damage to any person or property which occurs as a result thereof.

b. All such installations shall be in accordance with the best modern practice and national underwriting standards and shall be so maintained. Permits shall be issued only to owners of the facility and shall be non-exclusive. Installations which will interfere with the proper operation and maintenance of highways are expressly prohibited.

1) No installation may be made except upon the explicit condition that the owner thereof shall, at no cost to the department, remove or relocate the facility when that is necessary to permit the widening, relocation, or other improvement of the highway, when so ordered by the chief engineer of the department or his duly authorized representative; however, this condition shall not apply to the removal or relocation of municipally-owned utility installations located within the limits of the municipality in cases where the necessity of such removal or relocation is created by the construction, repair, or improvement of an interstate highway. In such instances the cost of removal or relocation shall be paid for by the department, and such payment shall be deemed a valid use of funds appropriated or otherwise made available to the department for highway purposes. Payment for such relocation or removal of municipally owned utility installations shall be made only as to projects in the process of construction on July 1, 1992, and projects begun thereafter. The making of such payments shall be conditioned upon the availability of federal aid funds to reimburse the department for such expenditures.

a) However, in such instances where a municipality, parish, or special district created by or pursuant to law or nonprofit water corporation or

nonprofit gas district owns a utility installation, and it is necessary to remove or relocate such installation for the construction, repair, widening, relocation, or improvement of a state or an interstate highway. and a public accountant, the Department of Transportation and Development, or the entity's private certified public accountant, after an examination of the books of such municipality, parish, special district, nonprofit water corporation, or nonprofit gas district, certifies that unencumbered funds are not available out of the accumulated unreserved earnings generated by the utility for payment for the removal or relocation of the utility installation, the department may contract itself for the proposed work to the utilities.

b)

i. "Unencumbered funds" as used in this Subsection shall not include an amount equal to ten percent of the annual income from the utility that a municipality, parish, special district, nonprofit water corporation, or nonprofit gas district is hereby authorized to set aside as reserve. However, if the office of highways contracts itself for the utility removal or relocation, the municipality, parish, special district, nonprofit water corporation. or nonprofit gas district shall henceforth be prohibited from locating a utility installation in any state-owned right-of-way until the municipality, parish, special district, nonprofit water corporation, or nonprofit gas district reimburses the state for the cost of the removal or relocation. Not withstanding the foregoing provision, the Department of Transportation and Development may enter into any contract allowing any municipality, parish, special district, nonprofit water corporation or nonprofit gas district to locate a utility installation in a state owned right-of-way if the contract is required by the public need.

ii. The definition of unencumbered funds as used in this Section shall not be applicable unless and until there is approval of the Federal Highway Administration of the United States Department of Transportation.

3) The chief engineer, or his duly authorized representative, is hereby authorized to negotiate utility relocation agreements containing liquidated damages clauses, not to exceed .05 percent per day of the estimated utility's relocation costs, regarding delays caused solely by the unjustifiable delinquency of a utility in the completion of relocation work. The chief engineer, or his duly authorized representative, may decline the issuance of a permit to any utility company that is unjustifiably delinquent in completing a relocation project and shall continue to so decline until such a project is completed.

4) Where existing lines are to be relocated and the utility company does not have sufficient information of record to determine the location of its facilities, then the utility is required to advise the department and fully cooperate with

the department's contractor by locating or exposing, if necessary, to enable the contractor to avoid or minimize damages during construction.

5) All nonmetallic utility lines Installed or relocated within the highway right of way by permit or otherwise will be provided with pipe locator wire or tape acceptable to the department.

The chief engineer, or his duly authorized representative, may require a deposit in the form of a certified check or other guaranty in a form and in an amount deemed by him to be necessary for the proper protection of the state prior to the issuing of a permit when the installations require excavations, or at other times when he believes a deposit or guaranty is necessary to protect the department's interests.

The chief engineer, or his duly authorized representative, may also assess reasonable utility operator's annual permit fees in connection with the issuance of permits. Such fees as determined by the department shall not exceed the maximum fees as set in the following schedule:

UTILITY OPERATOR MAXIMUM ANNUAL FEE SCHEDULE

Operator Type	Customers	Maximum Annual Fee
Class 1	0 - 100	$ 20.00
Class 2	101- 500	$ 50.00
Class 3	501-6000	$200.00
Class 4	more than 6000	$700.00
Operator of Transmission Pipelines		$100.00/Parish $1.500.00/Maximum

12. EXCAVATIONS

12.1. LA. ONE CALL

12.1.1. Requirements

The Louisiana Damage Prevention Law became effective July 26, 1988. R. S. 40:1749.13 requires excavators and demolishers to notify a Regional Notification Center of their excavation activity. Telephonic notice must be given at least 48 hours, but not more than 120 hours, in advance, excluding weekends and holidays. The owner/operator of an underground facility must mark the location or provide information to enable an excavator or demolisher using reasonable means to determine the location of the underground facility. R. S. 40:1749:14 states that each owner/operator of an underground facility, excluding cable television, shall conduct or participate in a Regional Notification Center. OSHA Regulation 29 CFR Part 1926 and the Pipeline Safety Act of 1992 also include provisions for excavation efforts.

12.1.2. Procedures

1. Call the Louisiana One Call Center at 1-800-272-3020 (toll free) 48 hours, excluding weekends and holidays, before digging is scheduled to begin. If less than a 48 hour notice is provided by the caller, the Louisiana One Call System members will have difficulty scheduling the marking activity. On all location requests except emergencies, the Louisiana One Call operator will advise the caller that the marking should take place within 48 hours. Have the following information available when calling:
   - Name and telephone number of the company doing the work and a contact person familiar with the operation and work location.
   - Date and time the digging is scheduled to begin.
   - Whether the work location is within the city limits or in the parish.
   - The address and/or a description of the work site location.
   - The name and/or number of the nearest intersecting roadway to the work site. Street intersections are the primary reference points used to identify the area in which the digging will take place and the Louisiana One Call members to be notified.

LA. ONE CALL (cont.)

- The distance and direction of the work site from the nearest intersection.
- Advise the operator if the digging activity will parallel a roadway. If it does, indicate the starting point and the direction in which the work will proceed and for what distance.
- If the digging is part of a large project, only provide information regarding the work to be performed within the next 2 or 3 days. If work progresses on schedule, then call in another request for the next 2 or 3 days of work. A call to Louisiana One Call should be a daily work activity.

2. Once the Louisiana One Call Operator receives information, the caller will be given a location request number. The Louisiana One Call organizations with buried lines in the vicinity of the work will be identified and sent a copy of the information as provided by the caller. The operator will provide the names of the utility companies and pipeline companies that Louisiana One Call will notify.
   - NOTE: Not all utilities, communications, cablevision, pipeline companies and water companies, municipalities and political subdivisions participate in the Louisiana One Call System Program. If the digging activity will be in conflict with a line that is not covered by Louisiana One Call, notify that company or political entity directly.
3. If the 48-hour notice has been given, the Louisiana One Call members involved should have their lines marked before the digging is scheduled to begin. The following colors codes are required when the facility is marked:
   - Red: Electric, power lines, cables, conduit, lighting cables.
   - Yellow: Gas, oil, steam, petroleum, gaseous materials.
   - Orange: Communications, alarm or signal lines, cable TV, conduit.
   - Blue: Water, irrigation, slurry lines.
   - Green: Sewers, drain lines.
   - White: Proposed excavation.
   - Pink: Temporary survey marking.
4. After calling Louisiana One Call:
   - Retain the location request number for future reference. It is proof of the call to Louisiana One Call. Should someone have to call back for any reason the check on a ticket, the operator will need the request number to locate the file.

LA. ONE CALL (cont.)

- If the digging activity comes within 18 inches of a utility line, exercise extreme caution. Hand digging to expose the buried line is recommended.
- Pipeline companies often require that their personnel be on site when digging takes place near their lines or within their rights-of-way.
- When the underground location markings are obscured or no longer visible due to weather, construction activity or vandalism, a new marking should be requested through the Louisiana One Call Center. In this case the caller will be issued a new ticket number and 48 hours must be allowed for new markings to take place.
- If a specific utility has a buried line in the area, but a marking was not provided within 48 hours as requested, contact the Center for assistance before digging. Louisiana One Call personnel will again notify the utility and advise then that the contractor is ready to dig.

5. CALLING LOUISIANA ONE CALL CENTER DOES NOT ELIMINATE THE EXCAVATOR'S LIABILITY FOR DAMAGES HE OR HIS EMPLOYEES MAY CAUSE.

12.2. LA. STATE LAW

The following is the Louisiana Underground Utilities and Facilities Damage Prevention Law. This law was originally passed in 1988 and was amended in 1992. The amendments have been incorporated into this document.

PART VIII. UNDERGROUND FACILITIES

This Part was originally enacted as Part VII of Chapter 8 of Title 40, consisting of R. S. 40:1761 by Acts 1988, No. 923,.1 On authority of R. S. 24:253, the Part was re-designated as Part VII of Chapter 8 of Title 40, and the sections as R. S. 40:1749.11 to 40:1749.22.

1749.11 Short title; purpose

A. This part shall be known and may be cited as the “Louisiana Underground Utilities and Facilities Damage Prevention Law”.

B. It is the public policy of this state to promote the protection of property, workmen, and citizens in the immediate vicinity of an underground facility or utility from damage, death, or injury and to promote the health and well-being of the community by preventing the interruption of essential services which may result from the destruction of, or damage to, underground facilities or utilities.

1749.12 Definitions

As used in this part, the following terms shall have the meanings ascribed to them in this Section:

(1) “Damage” means any defacing, scraping, gorging, breaking, cutting, or displacement of, impact upon or removal of an underground facility or utility or its means of primary support.

(2) “Demolition” means the total or partial wrecking, razing, rendering, moving, or removing of any building or structure, movable or immovable.

(3) “Emergency” means any abnormal condition that endangers life or property including the interruption of vital services.

(4) “Excavation” or “excavate” means any operation for the purpose of movement or removal of earth, rock, or other materials in or on the ground by the use of powered or mechanical or manual means, including pile driving, digging, blasting, auguring, boring, back filling, dredging, compressing, plowing-in, trenching, ditching, tunneling, grading, and mechanical probing.

(5) “Excavator” means any person who engages in excavation operations.

LA. DAMAGE PREVENTION LAW (cont.)

(6) "Operator" means any person, individual, governmental agency or political subdivision or their agents, joint venture, firm, partnership, association, or corporation who owns or operates a public or private underground facility or utility which furnishes a service or material or stores, transports, or transmits electric energy, steam, oil, gases, gas, mixture of gases, petroleum, petroleum products, hazardous or flammable fluids, toxic or corrosive fluids/gases, including telephone or telegraph system, fiber optic electronic communication systems, or water or water systems, or drainage, sewage systems, or traffic control systems or other items or like nature.

(7) "Person" means an individual, firm, partnership association, corporation, joint venture, municipality, governmental agency, political subdivision, or agent of the state or any legal representative thereof.

(8) "Regional notification center" means a nonprofit association, or an organization of operators consisting of two or more separate operators, who jointly have underground facilities or utilities in three or more parishes in Louisiana, or an operator who has underground facilities or utilities in a majority of parishes in Louisiana and who is organized to protect its members or its own installation from damage.

(9) "Service line or lines" means underground facilities or utilities that provide power, gas, communication or water capabilities to a building or structure or buildings or group of structures.

(10) "Underground facility or utility" means any pipe, conduit, duct, wire, cable, valve, line, fiber optic equipment, or other structure which is buried or placed below ground or submerged for use in connection with storage, conveyance, transmission or protection of electronics communication system, telephone or telegraph system or fiber optic, electric energy, oil, gas, gases, steam, mixture of gases, petroleum, petroleum products, hazardous or flammable fluids/gases, toxic or corrosive fluids/gases, hazardous fluids/gases or other substances of like nature or water or water systems, sewage systems or traffic, drainage control systems, or other items of like nature.

LA. DAMAGE PREVENTION LAW (cont.)

1749.13 Excavation and demolition; prohibitions

A. Except as provided in this Section, no person shall excavate or demolish in any street, highway, public place or servitude of any operator, or near the location of an underground facility or utility, or on the premises of a customer served by an underground facility or utility without having first ascertained in the manner prescribed in Subsection B of this Section, the approximate location of all underground facilities or utilities in the area which would be affected by the proposed excavation or demolition.

B.(1) Except as provided in R. S. 40:1749:15, prior to any excavation or demolition, each excavator including cable television owners or operators, shall serve telephonic notice of the intent to excavate or demolish to the regional notification center or centers serving the area in which the proposed excavation or demolition is to take place. Such notice shall be given to the notification center at least 48 hours, but not more than 120 hours, excluding weekends and holidays, in advance of the excavation or demolition activity. Holidays shall consist of the following: New Year's Day, Good Friday, Independence Day; Labor Day, Thanksgiving Day, and Christmas Day.

(2) This notice shall contain the name, address, and telephone number of the person filing the notice of intent, and, if different, the person responsible for the excavation or demolition, the starting date, anticipated duration, and type of excavation or demolition operation to be conducted, the location of the proposed excavation or demolition and a statement as to whether explosives are to be used.

(3) Telephonic notice shall be recorded on tape or stored into an electronic data bank by the regional notification center and a record of the notice shall be retained for a three-year period from the date of notification.

(4) Notice shall be given and shall include a specific location request for excavation or demolition work to be performed at least 48 hours, but not more than 120 hours, excluding weekends and holidays, in advance of actual work commencement. Holidays shall consist of the following: New Year's Day, Good Friday, Independence Day; Labor Day, Thanksgiving Day, and Christmas Day. The marking of an operator's facility or utility shall be provided for excavation or demolition purposes only.

C. This part shall not only apply to activities by operators or land owners excavating their own underground facilities on their own property or operators' exclusive right-of-way provided there is no encroachment on the rights-of-way of any operator.

LA. DAMAGE PREVENTION LAW (cont.)

1749.14 Regional notification center

A. Each operator on an underground facility, excluding cable television but including all state agencies and political subdivision of the state, shall become a member of, participate in, and share the cost of a regional notification center, except as provided for in R. S. 40”1749.19.

B. A regional notification center receiving a notice of intent to excavate shall notify all member operators having underground facilities in or near the site of the proposed excavation.

C.(1) Each operator of an underground facility or utility, after having received the notification request from the regional notification center of an intent to excavate, shall supply, prior to the proposed excavation, the following information the person responsible for the excavation:

(a) The approximate location and type of all of its underground facilities which may be damaged as a result of the excavation or demolition.

(b) Unless otherwise required by federal or state statutes, the approximate location and type of underground facility may, at the operator’s option, be marked to locate the facilities. If the facilities are visibly marked by the operator, they shall be marked by the operator by color coded paint, flags, or stakes or similar means using the American Public Works Association color code.

(2) If the operator does not visibly mark the location of these facilities or utilities, the operator must take action or provide information to enable an excavator using reasonable and prudent means to determine the approximate location of the facility or utility. The information provided by the operator shall include a contact person and a specific telephone number for the excavators to call. After the operator has received the notification request, the information on location, size, and type of underground facility must be provided by the operator to the excavator prior to excavation.

D. For the purpose of this Section, the approximate location of the underground facilities is defined as an area not wider than the width of the underground facility or utility as marked plus 18 inches on either side.

LA. DAMAGE PREVENTION LAW (cont.)

1749.15 Emergency excavation

The notice required under R. S. 40:1749.13 shall not apply to any person conducting an emergency excavation to ameliorate an imminent damage to life, health or property. Oral notice of the emergency excavation shall be given as soon as practicable to the regional notification center or each operator having underground facilities located in the area and, if necessary, emergency assistance shall be requested from each operator in locating and providing immediate protection to its underground facilities.

1749.16 Precautions to avoid damage

In addition to the notification requirements in R. S. 40:1749,13 and 1749.14 and the emergency notification requirements in R. S. 40:1749,15, each person responsible for an excavation or demolition operation shall do the following:

(1) Plan the excavation or demolition to avoid damage to or minimize interference with underground facilities in and near the construction area.

(2) Maintain a safe clearance between the underground facilities or utilities and the cutting edge or point of any power or mechanized equipment, taking into account the known limit of control of the cutting edge or point to avoid damage to facilities.

(3) Provide support for underground facilities or utilities in and near the construction area, during excavation and back-filling operations, as may be reasonable necessary to protect the facility.

(4) Dig test pits to determine the actual location of facilities or utilities handling electricity, gas, oil, petroleum products, or other flammable, toxic or corrosive fluid/gases if these facilities or utilities are to be exposed.

1749.17 Excavation or demolition; repair of damage

A. Except as provided by Subsection B of this Section, each person responsible for any excavation or demolition operations which result in any damage to an underground facility or utility shall, immediately upon discovery of that damage, notify the operator of the facility of the location and nature of the damage and shall allow the operator reasonable time to accomplish necessary repairs before continuing the excavation, demolition, or back-filling in the immediate area of damage.

LA. DAMAGE PREVENTION LAW (cont.)

B. Each person responsible for an excavation or demolition operation which results in the damage to any underground facility or utility permitting the escape of any flammable, toxic or corrosive fluids/gases shall, immediately upon discovery of that damage, notify the operator, local police, and the local fire department and take any other action as may be reasonably necessary to protect persons and property and to minimize the hazards until arrival of the operator's personnel or police and fire departments.

1749.18 Participants of a regional notification program.

Owners of underground facilities or utilities who are, on October 1, 1989, members of, participate in, and share in the cost of an existing regional notification center, on or after October 12, 1989 shall be deemed in compliance with the provisions of R. S. 40:1749.14.

1749.19 Voluntary participation by parish governments

A. Each incorporated municipality or parish government which owns or operates, in its own right or through a special district or districts created pursuant to constitutional or statutory authority, a drainage system, a sewer system, drainage, water or water system, traffic control system, an electrical energy system and/or a gas system underground facility with its local jurisdiction which would otherwise be included in R. S. 40:1749.14, and which does not desire to be so included, shall adopt an ordinance indicating this desire by January 1, 1990. This ordinance shall be filed with the secretary of state for verification purposes. An incorporated municipality or parish government which fails to adopt the ordinance shall be subject to the provisions of this Part on and after January 1, 1990 or 4 months after the letter required by Subsection B of this section is sent, whichever occurs last

B. Before August 31, 1989, a registered letter shall be sent by each non-profit regional notification center to the governing authorities of all incorporated municipalities and parishes within which are located the underground facilities or utilities of the operators who compose the regional notification center. The letter shall advise the incorporated municipalities and parishes of the provisions of this Section and shall include a copy of this Section. The governing authorities of the incorporated municipalities and parishes shall then notify the appropriate special district or districts within their jurisdictions.

LA. DAMAGE PREVENTION LAW (cont.)

1749.20 Violations; penalties

A person who violates the provisions of this Part shall be subject to a fine of not more than $250 for the first violation. Each subsequent violation shall be subject to a fine of not more than $1000.

1749.21 Miscellaneous provisions

A. This part shall not affect any civil remedies for personal injury or property damage, including damage to underground facilities or utilities.

B. Nothing in this Part shall affect any permitting process granted to a parish, municipal, local or state governing authority.

1749.22 Preemption

No parish, municipal, local, or state governing authority may enact any ordinance or promulgate any rules or regulations which are in conflict with the provisions of this Part.

13. PARISH REGULATIONS

13.1. SUBDIVISIONS

On December 10, 1999, The Parish Council adopted Ordinance No. 99-12-7, providing that the Code of Ordinances, Parish of St. Charles, State of Louisiana, be amended by revising Section IV.C. of Appendix C, the St. Charles Parish Subdivision Regulations of 1981, to reflect recent changes in design standards and materials specifications as required by the Department of Waterworks for the installation of water systems.

SUMMARY NO. 5003
INTRODUCED BY: CHRIS TREGRE
PARISH PRESIDENT
(DEPT. OF PLANNING & ZONING & DEPARTMENT OF WATERWORKS)

ORDINANCE NO. 99-12-7

An ordinance of the Parish of St. Charles providing that the Code of Ordinances, Appendix C, the St. Charles Parish Subdivision Regulations of 1981, Parish of St. Charles, State of Louisiana, be amended to reflect changes in resubdivision regulations and administration.

WHEREAS, the St. Charles Parish Code of Ordinances, Appendix C, St. Charles Parish Subdivision Regulations of 1981 set forth the requirements for subdivision development in St. Charles Parish; and,

WHEREAS, the Department of Planning and Zoning and the Department of Waterworks requests changes in Appendix C, St. Charles Parish Subdivision Regulations of 1981 in order to promote adequately planned and developed subdivisions in St. Charles Parish; and,

WHEREAS, in order to promote the health, safety, and welfare of residents of St. Charles Parish with respect to waterworks impacts due to subdivision construction within buildable land areas in St. Charles Parish; and,

WHEREAS, the St. Charles Parish Council desires to enforce Appendix C, St. Charles Parish Subdivision Regulations of 1981.

THE ST. CHARLES PARISH COUNCIL HEREBY ORDAINS:

SECTION I. That the St. Charles Parish Code of Ordinances, Appendix C, St. Charles Parish Subdivision Regulations of 1981, is hereby amended as follows:

PARISH ORDINANCE 99-12-7 (cont.)

a. **Water Mains.** Water mains shall be a minimum of eight (8) inches in diameter. Larger diameter mains my be required by the Department of Waterworks to insure an adequate supply to the development. Water mains shall be valved at each intersection, as required at tees and crosses and at a minimum of every one thousand (1,000) feet. Valves shall be located as shown on approved plans and shall be set with stems vertical. The sub-divider will indicate the location of each valve by means of a "V" shaped notch cut into the curbing at the valve site. Each valve must have a valve box centered over the valve stem to allow free access of a valve wrench. The top shall be set level with the finished grade surface. A precast concrete slab shall be set around each valve box and the top level with the finished grade surface. A tee shall be used for ninety (90) degree bends.

b. **Cover.** Cover over water lines shall be maintained as follows:
   (1) Eight (8) inch main lines shall have thirty-six (36) inches to forty (40) inches of cover.
   (2) Mains larger than eight (8) inches shall have forty-two (42) inches to forty-six (46) inches of cover.
   (3) Mains which cross under ditches shall be twenty-four (24) inches to twenty-eight (28) inched below the invert of the ditch.
   (4) All water mains crossing canals shall be installed under the canal. Mains which cross under a canal shall be twenty-six (26) inches to forty (4) inches below the invert of the canal. If the invert of the canal is more than twenty (20) feet in width a casing must be installed.

c. **Water main looping.** All six (6) inch water mains of one thousand and five hundred (1,500) feet or more, and eight (8) inch water mains of one thousand (1,000) feet or more, including existing mains, shall be looped when practical to two (2) separate sources of water.

d. **Fire Hydrants.** Fire hydrants shall be installed not more than five hundred (500) feet apart on the property line extended and at ends of lines to allow for flushing. Install all hydrants in an exact vertical position. Pumper nozzles shall face toward the street. Hydrants shall have proper bury length so that the bottom of the safety flange is between five (5) inches and eight (8) inches above finished grade level. Each hydrant shall have a six (6) inch main lead of at least three (3) feet. Hydrants shall be attached with Romac grip ring pipe restraints. Hydrant valves shall be a minimum of three (3) feet from hydrants located along a highway or thoroughfare and shall be valved. Hydrants that require valves shall be connected to a mechanical joint x flanged tee. See Detailed Specifications Section for hydrant installation details.

e. **Pipe.** Pipe shall be received, stored, handles, and installed strictly in accordance with the manufacturer's instructions. Only lubricant specified by the pipe manufacturer shall be used. Ends of pipe and fitting shall be throughly cleaned before applying joint lubricant. During joint assembly, PVC pipe shall be pushed into the bell up to the circumferential reference mark. In no case will solvent cement be used for joining pipe. Tighten mechanical joint bolts altermately on opposite sides in order to compress the gasket uniformly. All underground pipe and fittings shall be covered with eight (8) mil polyethylene film.

PARISH ORDINANCE 99-12-7 (cont.)

Pipe shall be installed according to applicable AWWA standards. Each section of pipe and each fitting shall be examined for defects before lowering into the trench. Any defective or damaged material shall be rejected and removed from the work site. All pipe and accessories shall be carefully lowered into the trench in such a manner to prevent damage. Under no circumstances shall pipe or accessories be dumped or dropped into the trench, Holes for couplings or bells shall be cut for all pipe regardless of type of pipe used. The barrel of the pipe shall rest evenly on the trench from end to end except for coupling or bell holes. If the trench bottom will not support the weight of the fitting, a foundation of select earth or shell shall be installed. Holes shall be sufficiently large to allow proper makeup of joint so that joints do not support the pipe weight. All pipe and material shall be kept clean during and after laying. If necessary, a swab will be used. Trench water shall not be permitted to enter pipes. The Department of Waterworks reserves the right to suspend pipe laying operations when unsuitable trench conditions exist. When pipe laying is not in progress, the open ends of the pipe shall be closed by use of temporary pipe plugs or "night caps". Plywood, or similar make-shift blocking which does not produce a water tight seal, will not be acceptable. All pipe shall be laid true to alignment and grade. Required horizontal or vertical defection shall not exceed seventy-five (75) percent of the maximum recommended by the pipe manufacturer. Hot taps made by the subdivider on existing water mains shall be made with a Mueller CL-12 or C1-36 tapping machine. All plugs, tees, bends and hydrants shall have celcure treated lumber rated for underground use for thrust blocks and fixture foundation of sufficient size to resist the force of water on or through the fitting. Any underground facility installed on a highway right-of-way that is non-conductive to electrical current must be installed with a non-corrosive tape placed directly over and on the center of the facility about twenty-four (24) inches above the pipe. The tape must be connected to all fixtures and appurtenances. A tracer wire shall also be attached directly to the pipe, all fixtures and appurtenances. The tracer wire will be run to the top of each valve box to allow direct connection to the wire. Radial clearance between parallel water and sewer line shall be not less than six (6) feet radial distance from water lines. In the event that sewer lines cross water mains, sewer lines must be at least eighteen (18) inches below water main at a 90 degree crossing. No utilities shall be installed directly above the water lines running parallel or closer than three (3) feet to the center of the water main.

f. **Meter Service Lines.** Underground service line valves and fittings shall conform to AWWA C800. Corporation stops shall be Mueller H-15000, or approved equivalent. Curb stops shall be Mueller H-15166, or approved equivalent. Copper tubing conforming to AWWA C800 or polyethylene tubing of two hundred (200) pounds per square inch PE3408, or approved equal conforming to AWWA C901 and ASTMD2737, may be used for one (1) inch service lines.

g. **Backflow Preventer.** Water service installations for meter sizes five-eighth (5/8) inch by three-fourths (3/4) inch and one (1) inch shall be made by the Department of Waterworks at the current installation charge. Meter sizes of two (2) inches and larger, and all industrial customers must have a reduced pressure backflow preventer and must be installed by a qualified contractor according to Department of Waterworks material and installation specifications.

PARISH ORDINANCE 99-12-7 (cont.)

Subdivider Responsibility. The subdivider shall conduct all work in such a manner that will not disturb existing water lines or contaminate drinking water in existing Department of Waterworks lines. The subdivider must take every precaution to keep water mains clean before and during installation to avoid unnecessary delays due to bacteriological contamination. The subdivider shall not expose, cut, tap into, or connect to existing Department of Waterworks lines, and shall not open or close any valves or any fire hydrants without securing permission of the Department of Waterworks. A department representative must be present during any such action. The subdivider must purchase water used for any purpose other than for pre-arranged flushing and testing of water lines. Any breakage of existing water lines or other utilities is the responsibility of the subdivider.

3. **Construction Inspection.** The installation of water systems shall be inspected by the Department of Waterworks designated inspector for compliance with approved plans and specifications at the expense of the subdivider. The subdivider shall extend full cooperation to the inspector in the course of making inspections and shall comply with all reasonable requests to observe work in progress and to review work which has already been performed. The inspector will be allowed an opportunity to inspect all lines, valves and fittings before being covered. Required pressure and leakage tests shall be witnessed by the inspector and by Department of Waterworks' personnel. The Department of Waterworks shall be reimbursed for all fees and expenses incurred by the inspector, prior or concurrent with, requesting the Department of Waterworks to approve the installation.
4. **Testing and Disinfecting Water Lines.** Flushing, pressure tests and leakage tests for ductile iron, polyethylene, and PVC pipe shall be performed in accordance with applicable sections of AWWA C600 at the pressures, time and allowable leakage stated below.
   a. **Flushing.** Before testing and disinfecting, the pipe shall be flushed clean with potable water. The subdivider shall notify the Department of Waterworks prior to filling and flushing new lines. The subdivider shall not operate any valves in the water system without securing permission from the Department of Waterworks. Flushing shall be accomplished through a stand pipe of the same diameter of the newly installed water main. Department of Waterworks' personnel shall be present prior to any flushing. The contractor will be allowed four times the volume of water in the pipe being laid for flushing purposes. Any additional water required for flushing shall be charged to the subdivider at the current water rates.

   b. **Pressure Test.** Department of Waterworks' personnel shall be present prior to the commencement of any pressure test. Each section of line between valves, or a longer section if permitted by the Department of Waterworks, shall be submitted to a hydrostatic pressure test of one hundred and twenty (120) pounds per square inch for not less than two (2) hours. Water lines being pressure tested can only be connected to a Department of Waterworks line by the use of a reduced pressure backflow assembly. Each section of pipe to be tested shall be slowly filled with water. and all air shall be expelled from the pipe through taps at points of highest elevation in the section to be tested. If hydrants or "blow offs" are not available at high spots in the line for air removal, then taps shall be made to accommodate a standard three-fourths (3/4) inch Mueller H-15000 corporation stop with Mueller threads, or equal, which shall be removed and the tap plugged with a brass plug upon completion of the test. After the test pressure of one hundred and twenty (120) pounds per square inch has been obtained, the subdivider shall verify that all valves in the section being tested are open

completely and then they may commence the leakage test in accordance with AWWA C605-94 standards.

PARISH ORDINANCE 99-12-7 (cont.)

If any loss in pressure is noted during the two (2) hour test period, the subdivider shall examine the pipe line and determine the source of leakage. If leaks are found in a joint, the joint shall be disassembled and necessary repairs made. Clamps shall not be used to repair leaks. Any cracked or defective pipes, fittings or specials discovered in consequence of this pressure test shall be removed and replaced with sound material at the subdivider's expense. After repairs, the section of line shall be re-tested until a hydrostatic pressure of one hundred and twenty (120) pounds per square inch is maintained for not less than two (2) hours.

c. **Leakage Test.** After the water line has passed a pressure test, a leakage test shall be performed. Leakage shall be defined as the quantity of water that must be supplied into the pipe section being tested to maintain a pressure within five pounds per square inch (5 psi) of the specified leakage test pressure after the pipe has been filled with water and the air in the pipeline has been expelled. No installation will be accepted if the leakage is greater than that determined by the formula:

L = (ND X Square Root of P) Divided by 7,400

Where: L = allowable leakage, in gallons per hour
N = Number of joints in the length of pipeline tested
D = nominal diameter of pipe, in inches
P = average test pressure during the leakage test, in pounds per square inch (gauge)

Leakage gallons per hour = (# of joints) X (Pipe Diameter) X (.00148)
All pressure and leakage tests are performed at one hundred and twenty pounds per square inch (120 psi).

Water lines being tested for leakage must not be connected to a Department of Waterworks line by the use of a reduced pressure backflow assembly. The pipeline as a whole, or in such sections as the Department of Waterworks may designate, shall be tested to a pressure of one hundred and twenty (120) pounds per square inch. The stated pressure shall be held a sufficient time to allow a true evaluation of leakage and shall depend upon the length of time tested, except that in no event shall the pressure be maintained for less than two (2) hours. Suitable means shall be provided for determining the quantity of water lost by leakage during the final hydrostatic pressure test. No pipeline or portion thereof shall be accepted until or unless the leakage is within the limit of 0.00148 gallons per joint per inch of nominal pipe diameter per hour. Any section of line that fails to meet the leakage test shall be repaired by the subdivider and re-tested until the leakage is within the allowable limits. Final pressure and leakage tests must be witnessed by the Department of Waterworks inspector.

d. **Disinfecting.** After completion of leakage tests, all parts of the pipelines installed shall be disinfected by the Department of Waterworks at the subdivider’s expense. Disinfection shall conform to AWWA Standard C651. If the discharge of highly chlorinated water would be harmful to vegetation, wildlife, or the environment, measures must be taken to impound and neutralize the chlorinated water prior to discharge, or to remove and dispose of same in an approved manner, at no additional cost to the Department of Waterworks.

PARISH ORDINANCE 99-12-7 (cont.)

e. **Chlorine Application.** All new mains and services, and any portion of existing mains repaired, shall be chlorinated by the application of sufficient chlorine provide a chlorine residual of not less than ten (10) parts per million after the chlorine solution is in the line. It should be sufficiently clean after proper precautions during the laying and flushing of the line so that an initial application of fifty (50) parts per million of chlorine will produce the required residual. Additional chlorine may be necessary if the mains chlorine solution is in the line. Chlorine solution shall be applied at one and of the line being disinfected. Water shall be withdrawn from the opposite end, and from the ends of all branches, until the chlorine solution completely fills ail lines to be disinfected. Valves and hydrants in the lines being chlorinated shall be operated while the chlorine solution is in the line.

f. **Final Flushing.** After the twenty-four (24) hour retention period, the chlorine solution shall be flushed out of the lines for appropriate disposal, and the lines filled with potable water. The lines shall then stand for twenty-four (24) hours before samples are taken for bacteriological tests. Sample points shall be installed as directed by the Department of Waterworks. Samples shall be taken by Department of Waterworks personnel and submitted to the State Department of Health for bacteriological examination. If any samples show a positive reaction, that portion of the line represented by the sample shall be disinfected again and the flushing and sampling repeated. This procedure shall be repeated until all portions of the system are completely disinfected.

5. **Materials Specifications.** Specification references to Standard Specifications of AWWA, ASTM, ANSI, AWPA, etc., shall apply to the latest edition, revision, or addendum thereto.

a. **Ductile iron pipe** shall be mechanically joint type manufactured and factory tested in accordance with AWWA C150 and AWWA C151, Class 50, cement lined, conforming to AWWA C104.

b. **Polyvinyl Chloride (PVC) plastic pipe** shall be Class 150 with integral bell that meets the requirements of AWWA C-900 and Underwriter's Laboratories (UL). The pipe shall meet requirements of wall thickness, of dimension ration DR18 and shall be manufactured to ductile iron size outside dimensions. Only blue colored PVC pipe shall be used for underground installation. The standard length shall be twenty (20) feet. The bell shall consist of an integral wall section with reinforced rubber ring. Mechanical joint fittings will be used with PVC pipe.

c. **Ductile iron mechanical joint fittings** shall be the compact type conforming to AWWA C153 and AWWA C110 rated for three hundred and fifty (350) pounds per square inch working pressure, cement lined in accordance with AWWA C104 with joints, ring type gaskets, lubricant and accessories conforming to applicable requirements of AWWA C1 11. Usaloy, or equal, corrosion resistant bolts shall be used.

d. **Gate valves** shall be iron bodied, epoxy coated interior, fully supported modified wedge disc with a resilient rubber seat ring internally reinforced by a concentric steel ring, which are manufactured and tested in accordance with AWWA specification C509. They shall be two hundred (200) pounds per square inch working pressure and four hundred (400) pounds per square inch test pressure. Valves shall have a non-rising stem with a two (2) inch square wrench nut, and

PARISH ORDINANCE 99-12-7 (cont.)

shall open by turning counterclockwise and shall be equipped with O-ring stem seals. Valves shall be Mueller series A2360-20 or approved equal

e. **Tapping sleeve valves** shall be similar to gate valves specified above and shall be Mueller A2360-16 or approved equal.

f. **Tapping sleeves** shall be the stainless steel type. The body shall be a full circle band that meets or exceeds the Department of Waterworks specifications for repair clamps, stainless steel 18-8 type 304 with gridded overlapping virgin neoprene rubber gasket. The flange shall be 304 (18-8) stainless steel or ductile iron AWWA C207 Class D ANSI one hundred and fifty pound drilling recessed to accept a standard tapping valve. Tapping sleeves shall be Smith-Blair 662 or 663, JCM 432 or Romac SST.

g. **Valve boxes** shall be constructed of cast iron for roadway service, with a minimum inside diameter of five and one-quarter (5 1/4) inches. The box shall be the adjustable crew type consisting of two pieces (base and top section), and shall include a cover. The cover shall be of the deep (two inches) socket type with the word "water" cast on the top. The box shall be Tyler 461 -S/562-S or approved equal.

h. **Valve box risers** shall be made of cast iron for roadway service. The riser shall fit into the top section of Tyler 461-S/562-S valve boxes and shall accept the lid. The riser shall be a Trumbull 357 series or approved equal.

i. **Fire hydrants** shall conform to AWWA specification C-502. Main valve shall be five and one-quarter (5 1/4) inch compression type which closes with pressure. Hydrant shall have two (2) nozzles at a measurement of two and one-half (2 1/2) inches and one nozzle at a measurement of four and one-half (4 1/2) inch "pumper nozzle"; all nozzles shall have nozzle caps and cap chains. All nozzles shall have National Standard threads. Operating nut shall be pentagonal, measuring one and one-half (1 1/2) inches from point to flat. Hydrant shall open by turning counter-clockwise. Hydrant shoe shall have mechanical joint connection for six (6) inch pipe. Hydrant barrel shall be of suitable length to set breakaway flange between three (3) inches and six (6) inches above finished grade. Fire hydrants shall be red in color. Hydrants shall be Mueller A-423 Super Centurion 200 or equal.

j. **Romac grip ring pipe restrainers** shall be used for the installation of fire hydrants, tees, valves and any directional change of water main.

k. **Concrete precast slabs** around valve boxes shall be two thousand and five hundred (2,500) pound compression strength at twenty-eight (28) days, two (2) feet square and four (4) inches thick. The circular opening in the center of the slab shall be approximately three-fourths (3/4) inches greater in diameter than the outer diameter of the valve box.

l. **Repair clamp** shall be complete circle stainless steel clamp pre-assembled with a gasket, a bridge plate, lugs, nuts, and bolts. The band shall be stainless steel type 304 with ends contoured into and positively attached to ductile iron or stainless steel lugs. The gasket shall be lap type with tapered ends, gridded, or virgin neoprene rubber for water service. The bridge plate shall be stainless steel type 304 recessed flush and bonded into the gasket. Bolts shall be high strength, low alloy steel with heavy semifinished hexagon nuts to AWWA C111 standards. Lugs shall be ultra high strength ductile iron to ASTM A536 or stainless steel. The clamp shall be Smith-Blair 226 or 261, JCM 101 or 131, or Romac CLI or SSI.

PARISH ORDINANCE 99-12-7 (cont.)

m. **Lumber** for thrust blocks or fixture foundation shall be cecure pressure treated southern yellow pine, either rough sawn or dressed with not less than three-fourths (0.75) pounds retention and rated for underground use.

n. **Concrete posts** shall be not less than one and one-half (I A) inches square with a length of seven (7) feet for valve markers. Each post shall be reinforced with two (2) Number Three (No. 3) deformed reinforcing bars.

o. **Canal crossing casing** shall be installed as per Department of Waterworks specifications. Casing shall be one-half (0.50) inch steel with one-half (0-50) mil asphalt coating on the inside and outside. Ductile iron water main shall be used in all casings. When determined appropriate by the Department of Waterworks, a valve shall be installed on each side of the canal.

p. **Sprinkler Sytem** installations must have a reduced pressure detector assemble Hersey Model 6 CM-RPDA or a Watts 909 RPDA, bronze or epoxy coated, installed in the main line. A Sensus SR 5/8 inch X ¾ inche meter must be installed across the check valve and routinely read to detect any unauthorized usage on the sprinkler line. This meter will be installed, read and billed the minimum rate only, at the customer'e expense. A complete set of drawings of a proposed sprinkler system installation must be submitted to the Department of Waterworks for approval. All taps, tie-ins and installations will be made at the customer's expense. See detailed Specifications Section for sprinkler system installation requirements.

A Diagrams and Detailed Specifications Section is proposed as Section VI. Detailed Diagrams and Specifications.

- Fire Hydrant Detail
- Canal Crossing Casing Drawing
- PVC Casing Diagram
- Reduced Pressure Backflow Specifications and Diagram
- Sprinkler System Specifications and Diagrams
- Pipe Deflection Diagrams and charts

The foregoing ordinance having been submitted to a vote, the vote thereon was as follows:

YEAS: RAMCHANDRAN, MINNICH, CHAMPAGNE, PHILLIPS, AUTHEMENT, JOHNSON
NAYS: NONE
ABSENT: ALEXANDER, DUHE, SIRMON

And the ordinance was declared adopted this 6th day of December 1999, to become effective five (5) days after publication in the Official Journal.

PARISH PRESIDENT: Chris Tregre

14. INDEX

ANTIFREEZE
  protection against contamination, 34
AS-BUILT DRAWINGS
  requirements, 3
BACKFLOW PREVENTERS
  approved preventers, 26
  installation, 27
  policy, 25
  testing/inspection, 25
CASING
  canal crossing diagram, 20
  pipe diagram, 24
  water main specifications, 23
CHLORINATION
  chlorine application requirements, 18
  water mains, 43
CONCRETE
  post specifications, 7
  slab specifications, 7
CONSTRUCTION
  acceptance by parish, 3
  bacteriological samples, 2
  completion limit, 2
  completion notification, 3
  contractor guarantee, 3
  final inspection, 2
  notification, 2
  pre-construction conference, 2
  pressure/leakage test, 2
  start of, 2
CONTRACTOR
  responsibilities, 12
DAMAGE PREVENTION LAW.
  La. One Call System, 60
DESIGN REQUIREMENTS
  hot taps, 10
  pipe, 9
  plugs, tees, bends, 10
  underground facility, 10
  water mains, 8
  water mains, cover over, 8
  water mains, looping, 8
DIAGRAMS
  canal crossing casing, 20
  fire hydrant, 19
  pipe casing, 24
  sprinkler systems, 30
EASEMENT
  definition, 45
EXCAVATION
  La. One Call System, 57
FIRE HYDRANTS
  diagram, 19
  specifications, 6
FLUSHING
  requirements, 14
HIGHWAY DEPT.
  permit fees, 49
LA. ONE CALL.
  policy/procedures, 57
LUMBER
  specifications, 7
MATERIAL SPECIFICATIONS
  concrete posts, 7
  concrete precast slabs, 7
  fire hydrants, 6
  gate valves, 5
  lumber, 7
  mechanical joint fittings, 5
  meter service lines, 11
  pipe, casing, 7
  pipe, deflection, 35
  pipe, ductile iron, 5, 39
  pipe, PVC, 5, 36
  repair clamps, 7
  ring pipe restrainers, 6
  road surfaces, 7
  road surfaces, asphalt, 41
  road surfaces, concrete, 41
  road surfaces, rock, 41
  sprinkler systems, 29
  tapping sleeve valves, 6
  tapping sleeves, 6
  valve box risers, 6
  valve boxes, 6
  water main casing, 23
  water main sleeve/clamps, 6
MECHANICAL JOINT FITTING
  specifications, 5
NEW DEVELOPMENTS
  approval procedures, 2
  letter to developers, 1
PERMITS
  Highway Dept., 49
PIPE
  casing, specifications, 7
  deflection, 35
  ductile iron, design requirements, 9
  ductile iron, mechanical joint fittings, 5
  ductile iron, specifications, 5
  ductile, iron, specifications & installation, 39
  PVC, design requirements, 9
  PVC, specifications, 5
  PVC, specifications & installation, 36

PLUGS, TEES, BENDS
  design requirements, 10
REGULATIONS
  land use, 2
  parish subdivision, 2
  zoning, 2
REPAIR CLAMPS
  specifications, 7
RIGHT-OF-WAY
  definition, 45
  form, 46
  policy, 45
RING PIPE RESTRAINERS
  specifications, 6
ROAD SURFACES
  asphalt specifications & installation, 41
  concrete specifications & installation, 41
  rock specifications & installation, 41
  specifications, 7
SERVICE POLICIES
  backflow preventers, 25
  cross connection program, 25
SERVITUDE
  definition, 45
SPRINKLER SYSTEMS
  diagram, 30
  installations, 29
  specifications, 29
  tie-ins, 29
SUBDIVISION REGULATIONS
  parish, 67
TAPPING SLEEVES
  specifications, 6
TAPS
  hot, design requirements, 10
  sprinkler system installations, 29
TESTING
  bacteriological, 2
  bacteriological, approval of, 2
  leakage, 2, 17
  pressure, 2, 15
  water system installations, 14
UNDERGROUND FACILITY
  design requirements, 10
VALVE BOXES
  risers, 6
  specifications, 6
VALVES
  gate, specifications, 5
  tapping sleeve, specifications, 6
WATER METER SERVICES
  application for, 3
  lines, material specifications, 11
  permit requirements, 3
  placed on property line, 3
  sprinkler systems, 29
WATER SYSTEM INSTALLATIONS
  as built drawings, 3
  chlorine application, 18
  disinfection, 14, 18
  flushing, 14
  flushing, final, 18
  inspections, 13
  inspections, final, 2
  lines, material specifications, 11
  specifications, engineer approved, 2
  specifications, health department review, 2
  specifications, materials, 5
  specifications, waterworks review, 2
  testing, 14
  testing, bacteriological, 2
  testing, leakage, 2, 17
  testing, pressure, 2, 15
  water main, cover over, 8
  water main, design requirements, 8
  water main, disinfection, 43
  water main, looping requirements, 8